2020

PRODUCT CATALOGUE

SLAT CHAINS AND CONVEYOR COMPONENTS

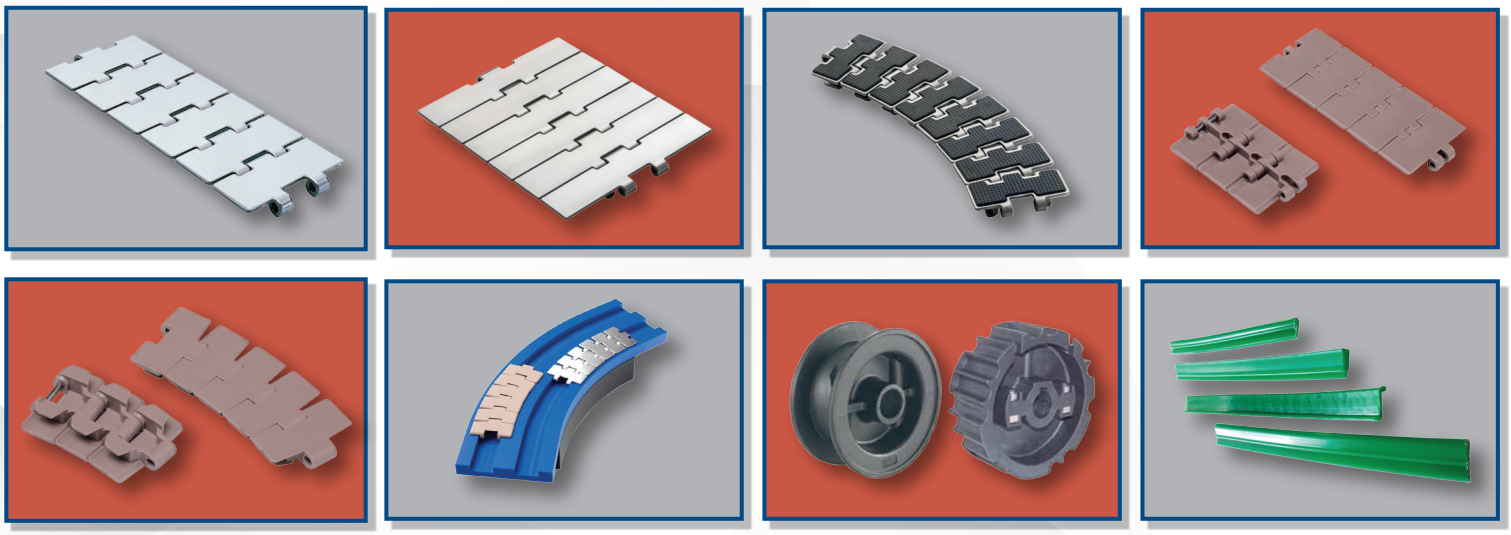

Meritt

MAGRIS ITALY

Index

1)	Metal Conveyor Chain & Thermoplastic Chain Catalogue	Cat 1	Page 01-20
2)	Components for Conveyor Catalogue	Cat 2	Page 21-40

Fully Manufactured in EUROPEAN UNION

CAT 1

METAL CONVEYOR CHAINS & THERMOPLASTIC CONVEYOR CHAINS

Meritt

MAGRIS ITALY

Materials

The Magris chains are produced with high quality steel/stainless steel in order to satisfy the growing needs of technological progress on the conveying lines.

SLATS

Hard Inox

Special work hardened, chrome-nickel, highly wear corrosion resistant stainless steel. It offers excellent mechanical characteristics and exceptional sliding properties, thanks to a very low surface roughness. It is particularly suitable for the critical points of bottling lines.
Material used for the following chain models: Super, Flex RXMS, Flex FMS, Flex FMS2, New Flex Mag. Super-G, Flex RXMS-G and New Flex Mag-G.

Inox

Ferritic, AISI 430 stainless steel, work hardened by cold-rolling, with good corrosion resistance. It has an excellent surface finishing with a low roughness, that is a very important quality for the sliding of conveyed products. It is the preferred choice for standard bottling industry applications.
Material used for the following chain models: Special, Standard and Flex RXMC.

Inox 18/8

Austentic, non-magnetic AISI 304 stainless steel (18% Chrome – 8% Nickel), work hardened for high resistance. It provides excellent resistance to chemical agents and corrosion, and offers excellent mechanical and duration characteristics. It is mainly used in the preservation and bottling industry. Approved by Food and Drug Administration (FDA), American government institute for the direct contact with foodstuff. Material used for the following chain models: Stella D., Flex RXM, Flex FM and Flex FM2.

PINS

- Pins are made of AISI 431 stainless steel, magnetic and work hardened for high resistance, in the following chain models: Special, Standard, Super, Super-G, Flex RXMC, Flex RXMS, Flex RXMS-G, Flex FMS, Flex FMS2 and New Flex Mag.
- Pins are made of austenitic stainless steel (18% Chrome - 8% Nickel), work hardened for high resistance in the following chain models: Stella D., Flex RXM, Flex FM and Flex Fm2.
- Pins are made of case-hardened carbon steel in the following chain models: Accate, Accate-C, Flex RXMA and Flex RXMA-C.

WORKING LOAD

The working load for the Standard Inox is 5100N (max) and the ultimate strength is 7800N(max)

N.B.: Upon request, all our chains can be produced with other types of stainless steel.

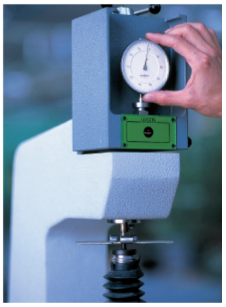

Materials	Minimum temperatures	Maximum temperatures	
		Dry env.	Wet env.
Inox	- 40 ° C	+ 260 ° C	+ 120 ° C
Hard Inox	- 40 ° C	+ 400 ° C	+ 120 ° C
HQ Inox	- 40 ° C	+ 430 ° C	+ 120 ° C
Inox 18/8	- 40 ° C	+ 400 ° C	+ 120 ° C
Inox 316	- 40 ° C	+ 400 ° C	+ 120 ° C
Carbon Steel	- 40 ° C	+ 180 ° C	+ 120 ° C

LFA
WLF

LOW FRICTION ACETAL RESIN

This material has a low coefficient of friction, high wear resistance and excellent resistance to chain tension. It is recommended for high load, high speed applications. FDA (Food and Drug Administration) approved for direct contact with food.

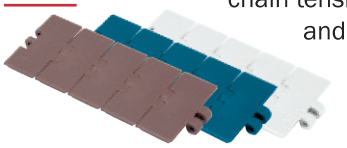

Working temperatures: - 40 ° C / + 80 ° C (dry environment)
- 40 ° C / + 65 ° C (wet environment)

LFA colours: light brown, green-blue / **WLF colour:** white

Contents

Metal Conveyor Chains

Straight running chains - Single hinge

Standard - Inox Page 2

Straight running chains - Double hinge

Standard - Inox Page 3

Stella D. - Inox 18/8 Page 3

Sideflexing hinged slat chains – TAB

Flex FMC - Inox Page 4

Flex FMS - Hard Inox Page 4

Sideflexing hinged slat chains for magnetic systems

Flex Mag - Inox Page 5

New Flex Mag - Hard Inox Page 5

Straight running chains with rubber inserts for inclined conveyors - Single hinge

Super-G/DHG - Hard Inox Page 6

Contents

Thermoplastic Conveyor Chains

Thermoplastic straight running chains - Single hinge

820 Series Page 7

Thermoplastic straight running chains - Double hinge

821 Series Page 8

Thermoplastic sideflexing chains

880 Magnetic Series Page 9

880 TAB Series Page 10

Biplanar thermoplastic chains

WLF 1700 / 1701 Series Page 11

WLF 1702 / 1703 Series Page 12

Case conveyor chains

D 600 Series Page 13

D 1400 Series Page 13

Thermoplastic straight running conveyor belts NEW

730 Series Page 14

730 PT Series Page 15

Other Products Page 16

Straight running chains - Single hinge

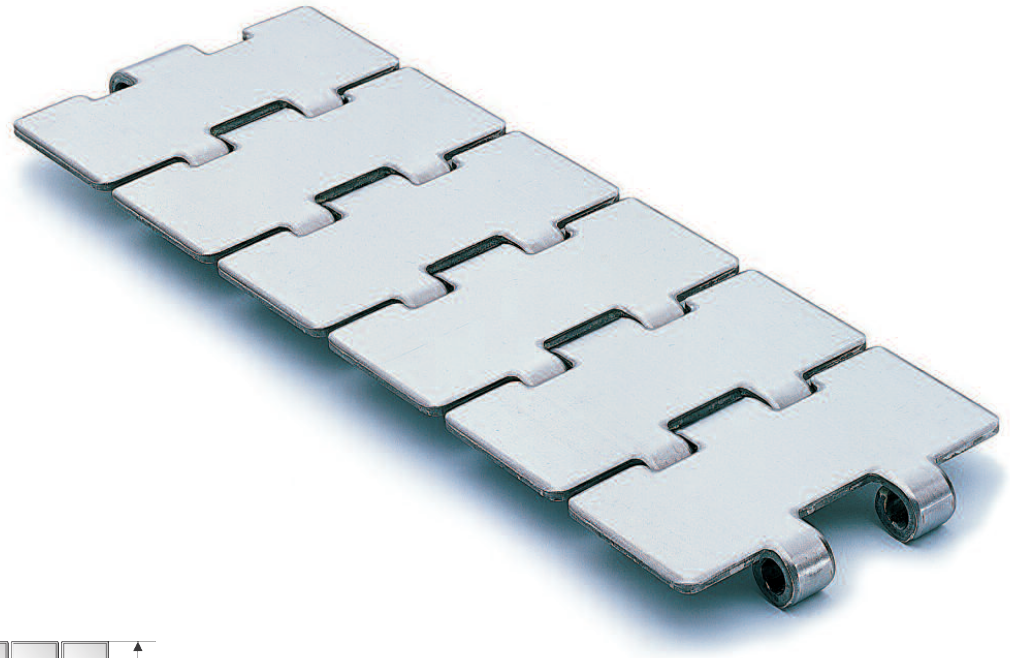

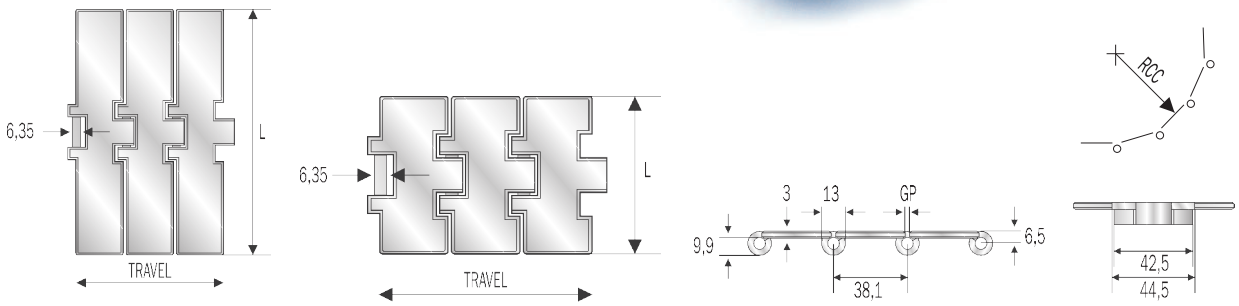

Standard

Inox

- Ferritic, AISI 430 stainless steel slats, work hardened, with shiny surface having low roughness.
- AISI 431 stainless steel pins, magnetic and work hardened for high resistance.

Chain ref.	Magris code	Model	L=Slat width		Hardness	GP	RCC	Weight per metre
			mm	''	HRC	mm	mm	Kg/m
SS 812 K225	**7.00.015**	Standard	57.1	2 1/4	20	1.6	150	2.18
SS 812 K250	**7.00.021**	Standard	63.5	2 1/2	20	1.6	150	2.25
SS 812 K275	**7.00.200**	Standard	69.9	2 3/4	20	1.6	150	2.35
SS 812 K300	**7.00.031**	Standard	76.2	3	20	1.6	150	2.50
SS 812 K325	**7.00.041**	Standard	82.5	3 1/4	20	1.6	150	2.65
SS 812 K350	**7.00.061**	Standard	88.9	3 ½	20	1.6	150	2.70
SS 812 K400	**7.00.070**	Standard	101.6	4	20	1.6	150	3.00
SS 812 K450	**7.00.080**	Standard	114.3	4 1/2	20	1.6	150	3.30
SS 812 K600	**7.00.100**	Standard	152.4	6	20	1.6	150	4.20
SS 812 K750	**7.00.110**	Standard	190.5	7 1/2	20	1.6	150	5.10
SSH 812 K325	**S.7.00.041**	Super	82.5	3 1/4	30	1.6	150	2.65

Smaller width - 31.8mm (1¼"), 44.5mm (1¾") and 50mm also available.
The above chains are also available in Super (Hard Inox), Inox 18/8, etc.,

Standard shipping lengths: 80 pitches = 10 feet = 3.048 metres

Straight running chains - Double hinge

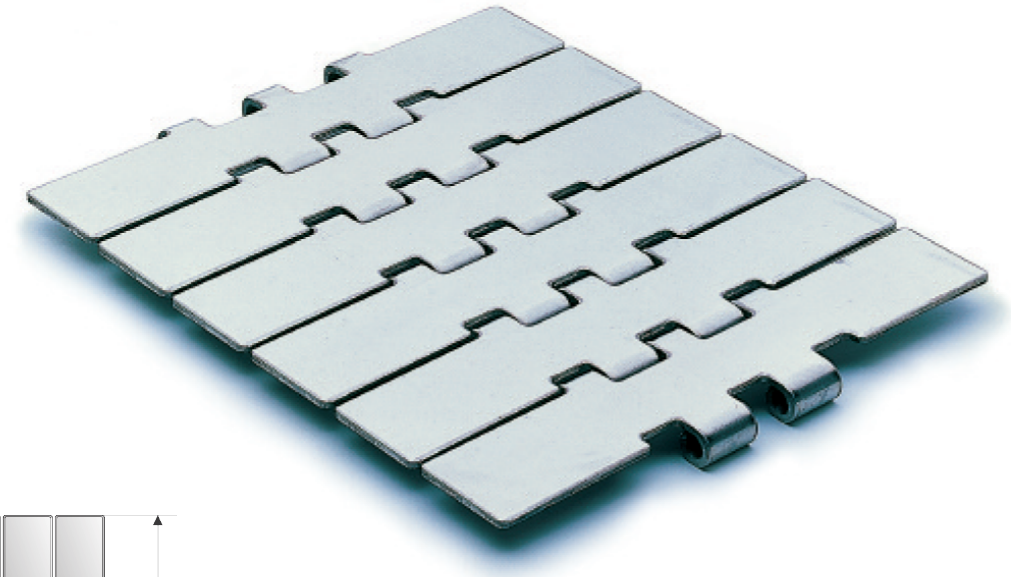

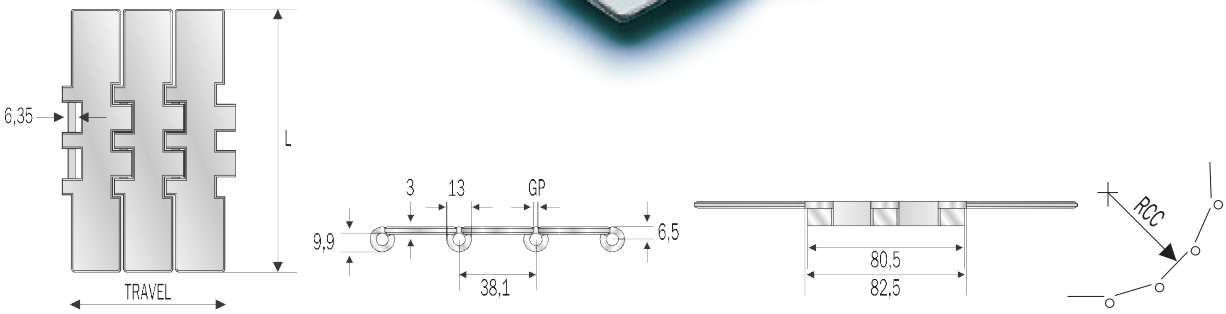

Standard

Inox

- Ferritic, AISI 430 stainless steel slats, work hardened, with shiny surface having low roughness.
- AISI 431 stainless steel pins, magnetic and work hardened for high resistance.

Stella D.

Inox 18 / 8

- Chrome-nickel, austenitic AISI 304 stainless steel slats (18% Chrome - 8% Nickel), work hardened for high resistance - shiny - with a roughness of Ra < 0.5 microns.
- Austenitic stainless steel pins (18% Chrome - 8% Nickel), work hardened for high resistance.

Chain ref.	Magris code	Model	L=Slat width		Hardness	GP	RCC	Weight per metre
			mm	''	HRC	mm	mm	Kg/ m
SS 802 K750	**7.04.110**	Standard	190.5	7 1/2	20	1.6	150	5.80
SSA 805 K750	**7.14.110**	Stella D.	190.5	7 1/2	26	1.6	150	5.80

Standard shipping lengths: 80 pitches = 10 feet = 3.048 metres

Sideflexing hinged slat chains – TAB

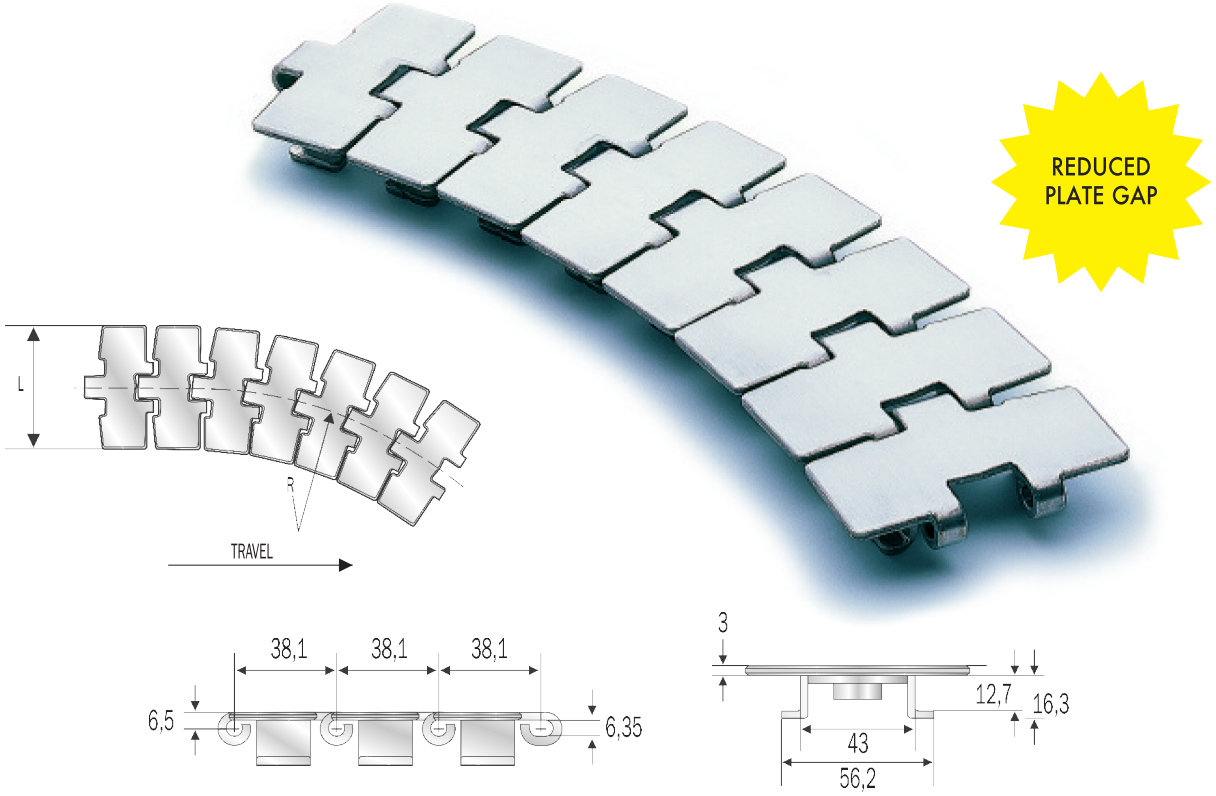

Flex FMC NEW

Inox

- Ferritic, AISI 430 stainless steel slats, work hardened, with shiny surface having low roughness.
- Chrome-nickel, austenitic stainless steel guide shoes (18% Chrome - 8% Nickel), work hardened for high resistance.
- AISI 431 stainless steel pins, magnetic and work hardened for high resistance.

Flex FMS

Hard Inox

- Special, chrome-nickel, stainless steel slats, work hardened for high resistance, with shiny surface having a roughness of Ra ≤ 0.3 microns.
- Chrome-nickel, austenitic stainless steel guide shoes (18% Chrome - 8% Nickel), work hardened for high resistance.
- AISI 431 stainless steel pins, magnetic and work hardened for high resistance.

Flex FMD

HQ Inox

- Special, new stainless steel, chrome-nickel (W.1.4589) slats, work hardened for HR, with low surface roughness, Ra ≤ 0.2 micron.
- Chrome-nickel, austenitic stainless steel guide shoes (18% Chrome - 8% Nickel), work hardened for high resistance.
- Special martensitic stainless steel pins HB series, magnetic and heat-treated for high resistance.

Chain ref.	Magris code	Model	Type	L=Slat width		R=Minimum sideflexing radius	Weight per metre
				mm	”	mm	Kg/m
SS 8811 T K325	**8.26.041**	Flex FMC Tab	Chain with hold-down Tabs	82.5	3 1/4	500	3.10
SS 8811 T K450	**8.26.081**	Flex FMC Tab		114.3	4 1/2	610	3.80
SS 8811 T K750	**8.26.111**	Flex FMC Tab		190.5	7 1/2	610	5.50
SSH 8811 T K325	**S.8.26.041**	Flex FMS Tab		82.5	3 1/4	500	3.10
SSH 8811 T K450	**S.8.26.081**	Flex FMS Tab		114.3	4 1/2	610	3.80
SSH 8811 T K750	**S.8.26.111**	Flex FMS Tab		190.5	7 1/2	610	5.50
SSX 8811 T K325	**D.8.26.041**	Flex FMD Tab		82.5	3 1/4	500	3.10

Standard shipping lengths: 80 pitches = 10 feet = 3.048 metres. Above chains available in Inox 18/8, with adequate quantities. Sideflexing guides for above chains are available.

Sideflexing hinged slat chains for magnetic systems

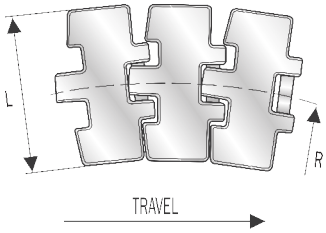

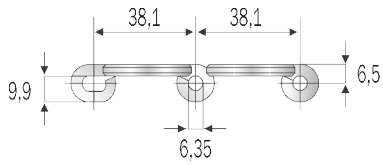

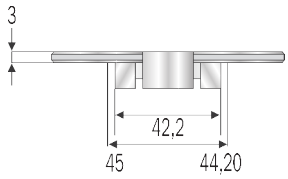

Flex Mag NEW

Inox

- Ferritic, AISI 430 stainless steel slats, work hardened, with shiny surface having low roughness.
- Special, stainless steel pins, 400 series - magnetic - work hardened for high resistance.

New Flex Mag

Hard Inox

- Special, chrome-nickel, stainless steel slats, work hardened for high resistance, with shiny surface having a roughness of Ra ≤ 0.3 microns.
- Special, stainless steel pins, 400 series - magnetic - work hardened for high resistance.

Chain ref.	Magris code	Model	L=Slat width		R=Minimum sideflexing radius	Weight per metre
			mm	’’	mm	Kg/ m
SS 8811 M K325	**7.08.040**	Flex Mag	82.5	3 1/4	500	2.50
SS 8811 M K450	**7.08.080**	Flex Mag	114.3	4 1/2	500	3.20
SS 8811 M K750	**7.08.110**	Flex Mag	190.5	7 1/2	500	4.90
SSH 8811 M K325	**S.7.08.040**	New Flex Mag	82.5	3 1/4	500	2.50
SSH 8811 M K450	**S.7.08.080**	New Flex Mag	114.3	4 1/2	500	3.20
SSH 8811 M K750	**S.7.08.110**	New Flex Mag	190.5	7 1/2	500	4.90

* Size produced only upon request. Delivery conditions and terms to be agreed.
Standard shipping lengths: 80 pitches = 10 feet = 3.048 metres
Magnetic Corner Tracks for above chains are available.

Straight running chains with rubber inserts for inclined conveyors - Single hinge

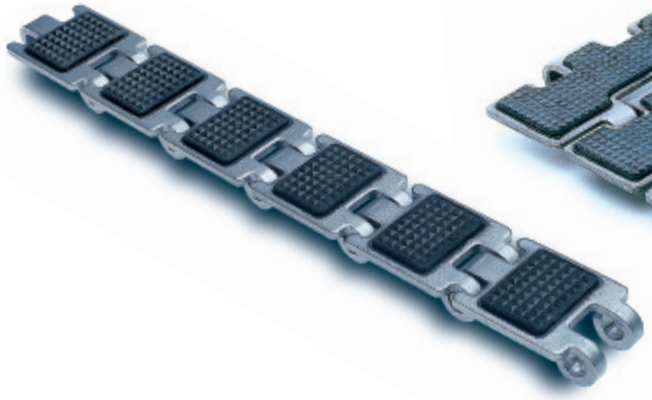

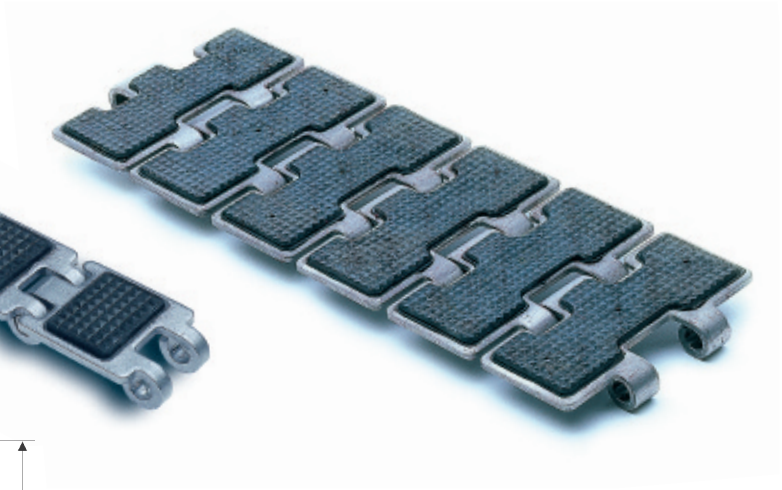

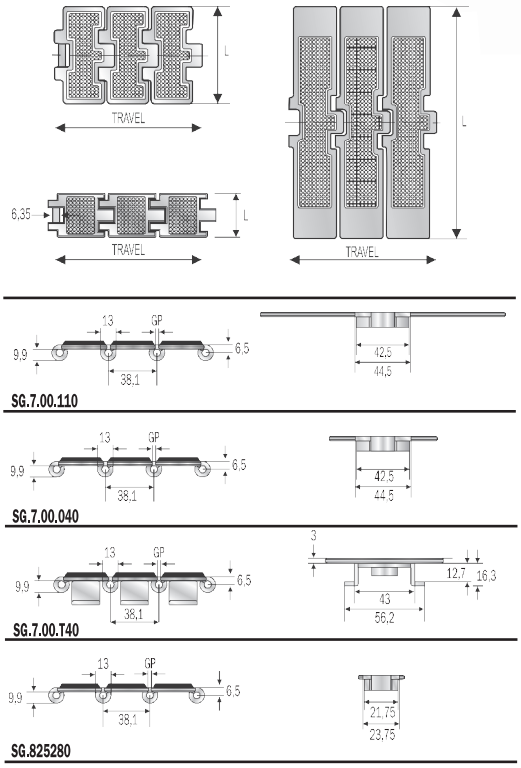

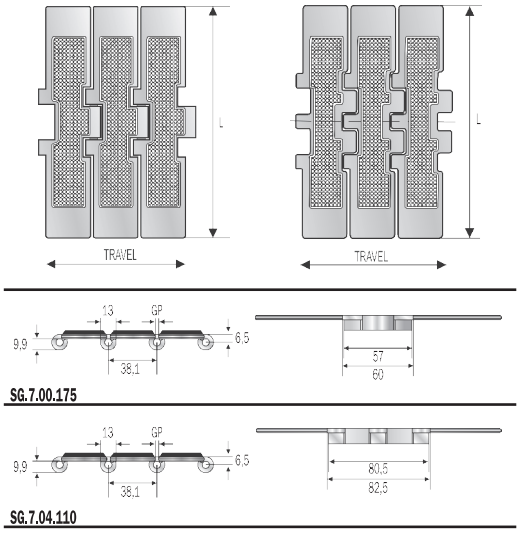

Super-G/DHG

Hard Inox

- Special, chrome-nickel, stainless steel slats, work hardened for high resistance, with a rubber insert.
- Chrome-nickel, austenitic stainless steel guide shoes (18% Chrome - 8% Nickel), (Super-G TAB).
- AISI 431 stainless steel pins, magnetic and work hardened for high resistance.

Chain ref.	Magris code	Model	L=Slat width		Hardness	GP	RCC	Weight per metre
			mm	"	HRC	mm	mm	Kg/m
SSHR 812 G K125	**SG.8.25.280**	Super-G	31.8	1 1/4	30	2.8	75	1.20
SSHR 812 G K325	**SG.7.00.040**	Super-G	82.5	3 1/4	30	2.8	75	2.80
SSHR 812 T G K325	**SG.7.00.T40**	Super-G Tab	82.5	3 1/4	30	2.8	75	3.40
SSH 812 G K450	**SG.7.00.080**	Super-G	114.3	4 1/2	30	1.6	150	3.50
SSH 812 G K600	**SG.7.00.100**	Super-G	152.4	6	30	1.6	150	4.40
SSH 812 G K750	**SG.7.00.110**	Super-G	190.5	7 1/2	30	1.6	150	5.30
SSH 8127 G K750	**SG.7.00.175**	Super-G	190.5	7 1/2	30	1.6	150	5.35
SSH 802 G K750	**SG.7.04.110**	Super-DHG	190.5	7 1/2	30	1.6	150	6.20

Standard shipping lengths: 80 pitches = 10 feet = 3.048 metres

Thermoplastic straight running chains - Single hinge

820 Series

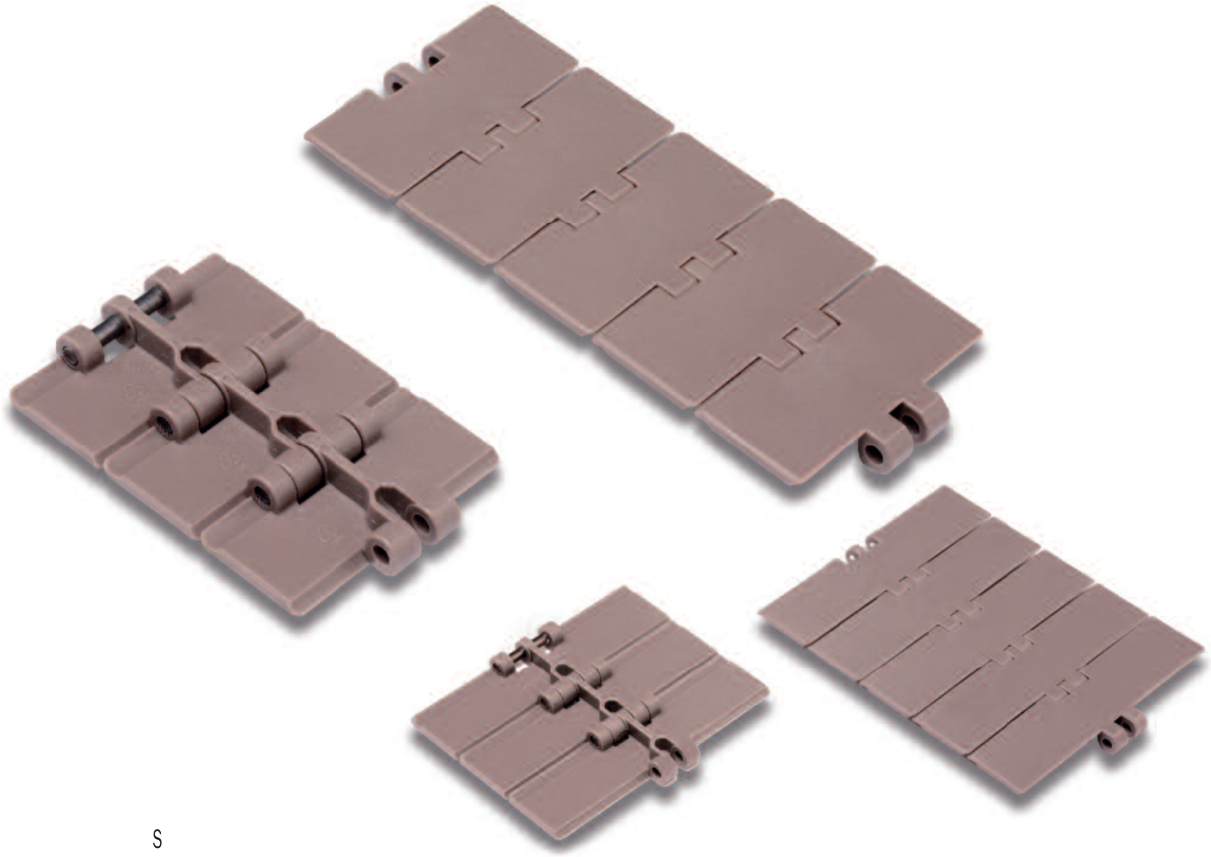

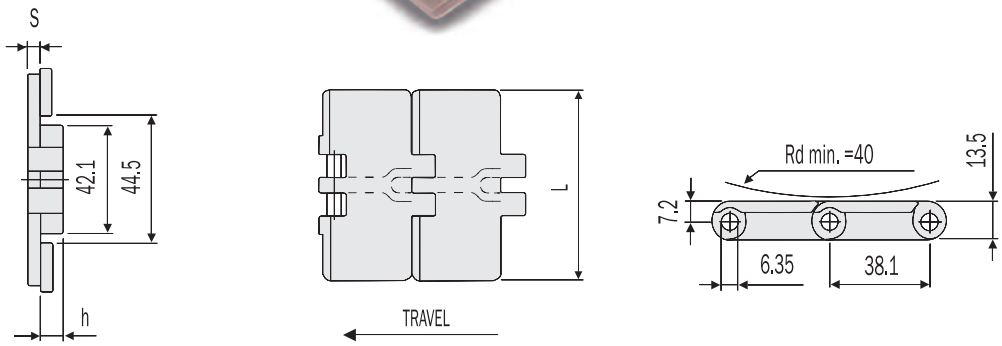

820 LFA

Low Friction Acetal Resin

- Plates in self-lubricating low friction acetal resin, light brown-coloured.
- Pins in special chrome-nickel stainless steel, work hardened for high resistance.

Chain Ref.	Magris code	Material	Width L mm.	Thickness S mm.	Height h mm.	Weight Kg/m
LFA 820 - K 250	**6.10.020**	(Light brown) LFA Acetal resin	63.5	4	9.5	0.73
LFA 820 - K 325	**6.10.040**		82.5			0.83
LFA 820 - K 350	**6.10.060**		88.9			0.87
LFA 820 - K 400	**6.10.070**		101.6			0.95
LFA 820 - K 450	**6.10.080**		114.3			1.03
LFA 820 - K 600	**6.10.100**		152.4			1.25
LFA 820 - K 750	**6.10.110**		190.5			1.47

- Standard shipping lengths = 80 pitches = 10 feet = 3.048 metres.
- These chain can be supplied either with pins in austenitic stainless steel, work hardened, highly wear resistant, or with pins in thermoplastic resin.

Thermoplastic straight running chains - Double hinge

821 Series

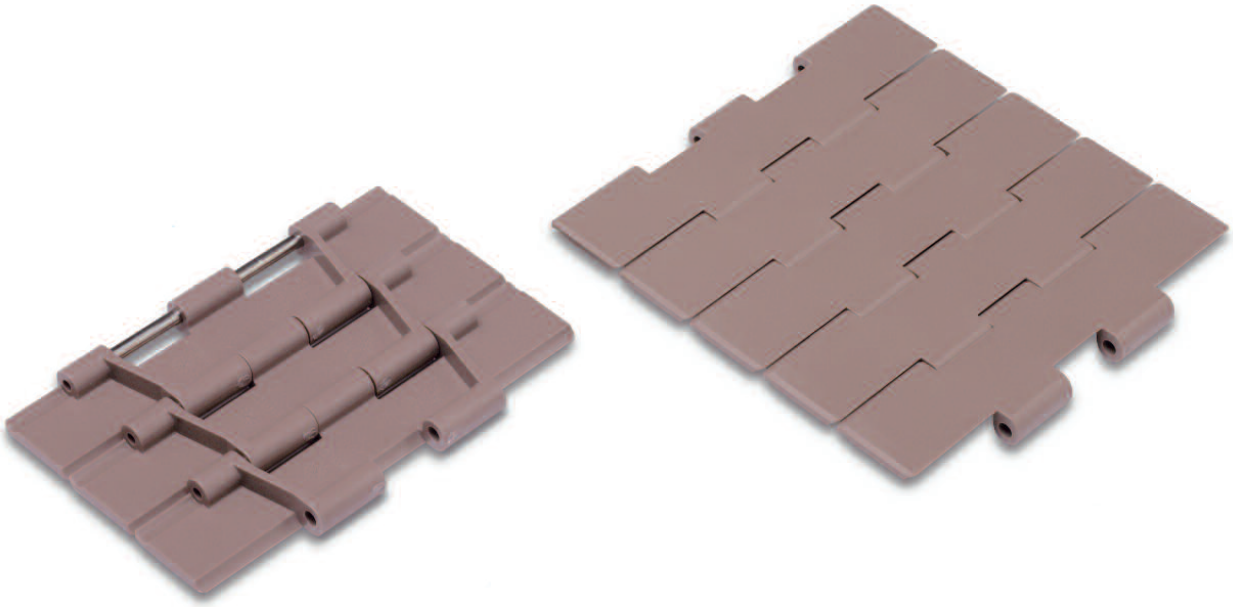

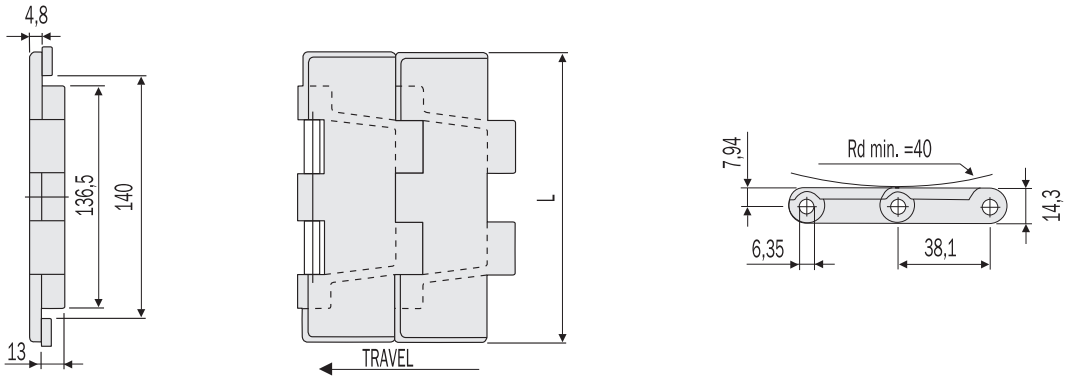

821 LFA

Low Friction Acetal Resin

- Plates in self-lubricating low friction acetal resin, light brown-coloured.
- Pins in special chrome-nickel stainless steel, work hardened for high resistance.

Chain Ref.	Magris code	Material	Width L mm.	Weight Kg/m
LFA 821 - K 750	**6.14.110**	LFA Acetal resin	190.5	2.50
LFA 821 - K 1000	**6.14.120**	(Light brown)	254.0	2.95
LFA 821 - K 1200	**6.14.130**		304.8	3.25

- Standard shipping lengths = 80 pitches = 10 feet = 3.048 metres.
- These chains can be supplied with pins in austenitic stainless steel, work hardened, highly wear resistant.

Thermoplastic sideflexing chains on magnetic tracks

880 M Series

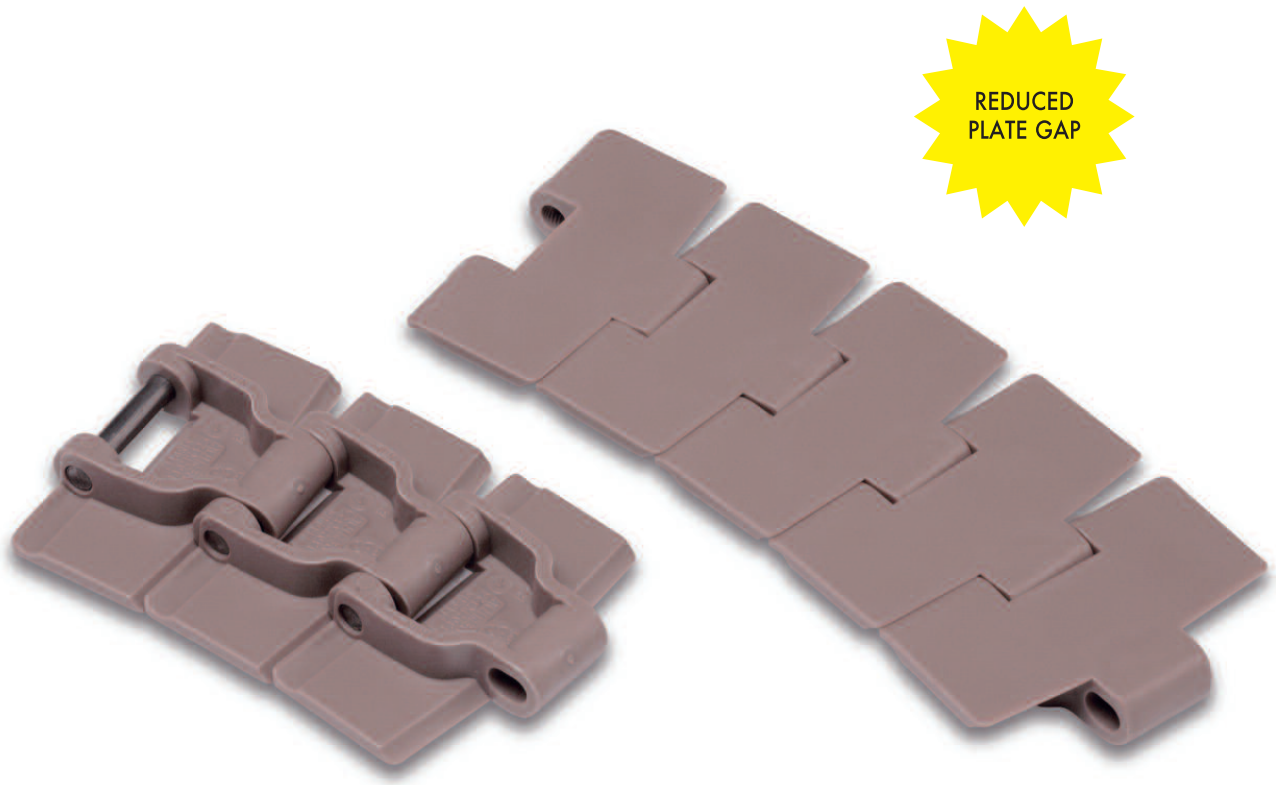

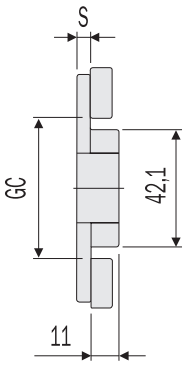

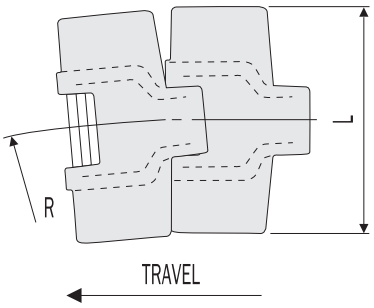

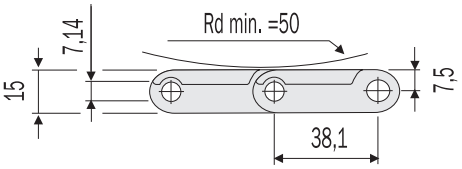

880 M LFA

Low Friction Acetal Resin

- Plates in self-lubricating low friction acetal resin, light brown-coloured.
- Pins in special stainless steel, 400 series, work hardened, magnetic, highly wear resistant.

Chain Ref.	Magris code	Material	Width L	Thickness S	Min.Radius R	GC Straight	GC Sidefl.	Weight
			mm.	mm.	mm.	mm.	mm.	Kg/m
LFA 880 M - K 325	**6.18.040**	LFA Acetal resin	82.5	4	500	44	44	1.03
LFA 880 M - K 450	**6.18.080**	(Light brown)	114.3		457			1.16

- Standard shipping lengths = 80 pitches = 10 feet = 3.048 metres.

Thermoplastic sideflexing chains TAB type

880 TAB Series

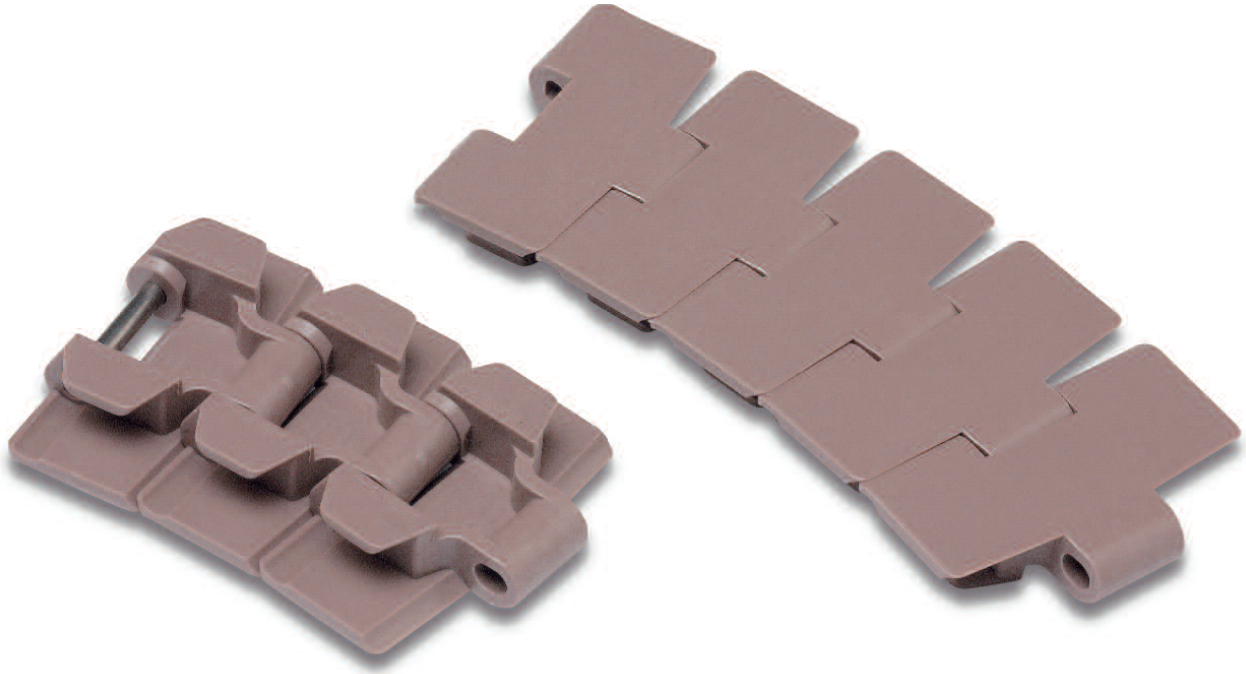

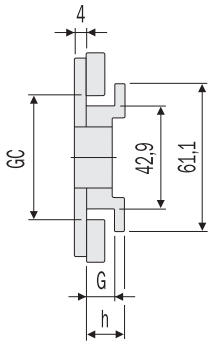

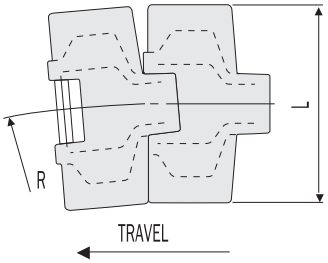

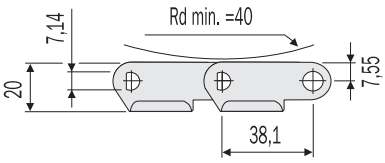

880 TAB LFA

Low Friction Acetal Resin

- Plates in self-lubricating low friction acetal resin, light brown-coloured.
- Pins in special chrome-nickel stainless steel, work hardened for high resistance.

Chain Ref.	Magris code	Material	Width L	Thickness S	G	Height h	Min.Radius R	GC Straight	GC Sidefl.	Weight
			mm.	mm.	mm.	mm.	mm.	mm.	mm.	Kg/m
LFA 880 TAB - K 250	**6.12.021**	LFA Acetal resin (Light brown)	63.5	4	11.5	16	400	46	44.2	0.80
LFA 880 TAB - K 325	**6.12.041**		82.5				400			0.94
LFA 880 TAB - K 350	**6.12.061**		88.9				400			1.01
LFA 880 TAB - K 450	**6.12.081**		114.3				400			1.08
LFA 880 TAB - K 600	**6.12.101**		152.4				400			1.28
LFA 880 TAB - K 750	**6.12.111**		190.5				400			1.48

- Standard shipping lengths = 80 pitches = 10 feet = 3.048 metres.
- These chains can be supplied either with pins in austenitic stainless steel, work hardened, highly wear resistant, or with pins in thermoplastic resin.

Biplanar thermoplastic chains

WLF 1700 Series

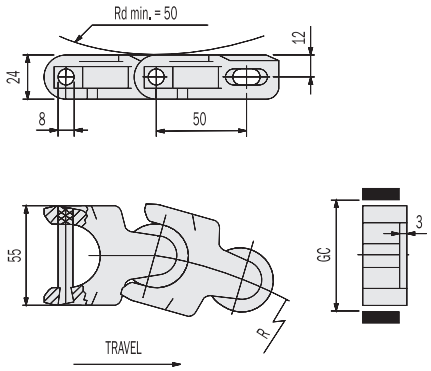

WLF 1700

Low Friction Acetal Resin

- Plates in self-lubricating low friction acetal resin, white-coloured.
- Pins in special chrome-nickel stainless steel, work hardened for high resistance.

Chain Ref.	Magris code	Material		Min. Radius R	GC Straight	GC Curve	Weight
		Link	Pin	mm.	mm.	mm.	Kg/m
WLF 1700	**1700.WA**	WLF Acetal resin (White)	Stainless Steel	140	58	-	1.26

- Standard shipping lengths = 122 pitches = 20 feet = 6.10 metres.

WLF 1701 Series

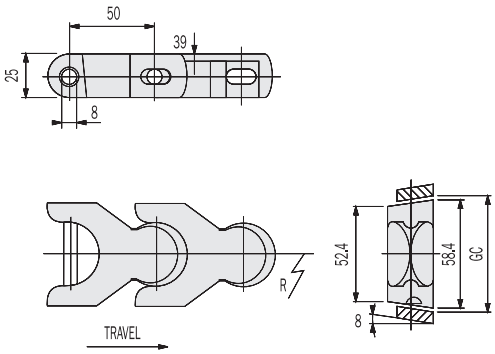

WLF 1701

Low Friction Acetal Resin

- Plates in self-lubricating low friction acetal resin, white-coloured.
- Pins in special chrome-nickel stainless steel, work hardened for high resistance.

Chain Ref.	Magris code	Material		Min. Radius R	GC Straight	GC Curve	Weight
		Link	Pin	mm.	mm.	mm.	Kg/m
WLF 1701	**1701.WA**	WLF Acetal resin (White)	Stainless Steel	150	62	60.3	1.5

- Standard shipping lengths = 122 pitches = 20 feet = 6.10 metres.

Biplanar thermoplastic chains

WLF 1702 Series

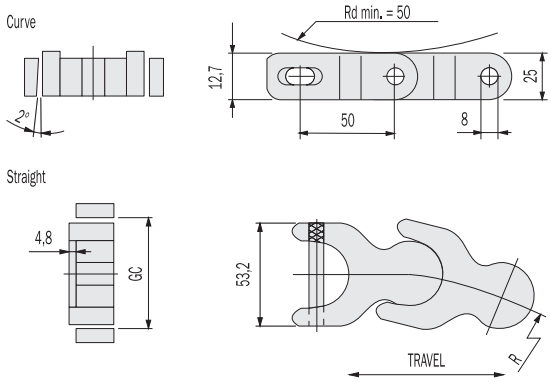

WLF 1702

Low Friction Acetal Resin

- Plates in self-lubricating low friction acetal resin, white-coloured.
- Pins in austenitic chrome-nickel stainless steel, work hardened for high resistance.

Chain Ref.	Magris code	Material		Min. Radius R	GC Straight	GC Curve	Weight
		Link	Pin	mm.	mm.	mm.	Kg/m
WLF 1702	**1702.WA**	WLF Acetal resin (White)	Stainless Steel	140	59.5	56.8	1.43

- Standard shipping lengths = 122 pitches = 20 feet = 6.10 metres.

WLF 1703 Series

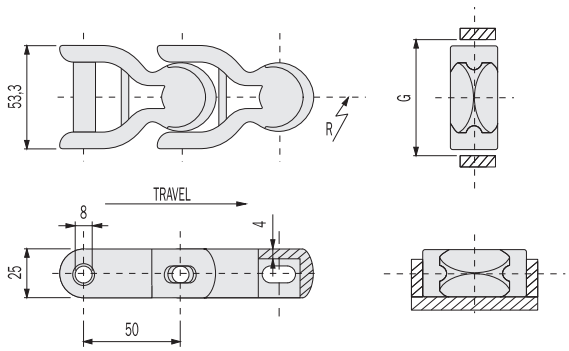

WLF 1703

Low Friction Acetal Resin

- Plates in self-lubricating low friction acetal resin, white-coloured.
- The open design ensures optimum cleaning possibilities.
- Pins in austenitic chrome-nickel stainless steel, work hardened for high resistance.

Chain Ref.	Magris code	Material		Min. Radius R	GC Straight	GC Curve	Weight
		Link	Pin	mm.	mm.	mm.	Kg/m
WLF 1703	**1703.WA**	WLF Acetal resin (White)	Stainless Steel	150	58.7	56.9	1.43

- Standard shipping lengths = 122 pitches = 20 feet = 6.10 metres.

Case conveyor chains

D 600 Series

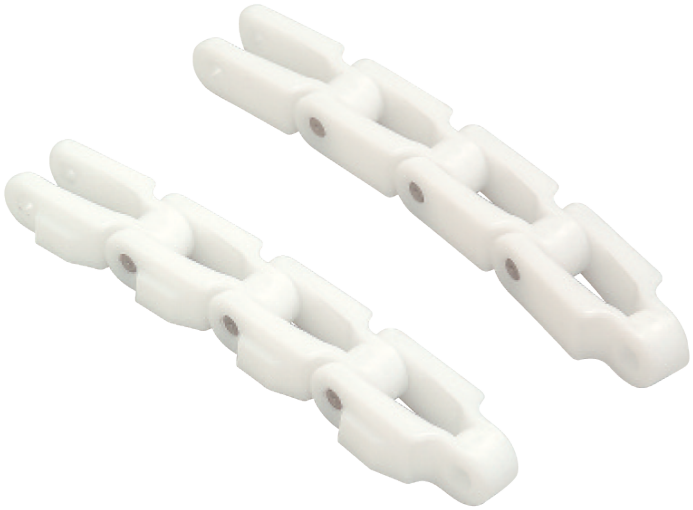

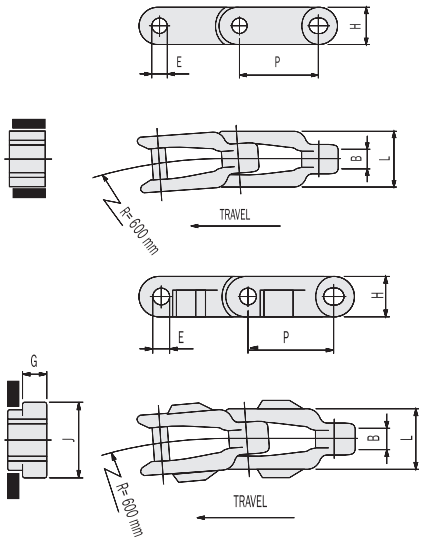

D 600 - D 600 TAB

Acetal Resin

- Plates in self-lubricating acetal resin, white-coloured.
- Pins in special chrome-nickel stainless steel, work hardened for high resistance.

Chain Ref.	Magris code	Material	Pitch P	Width L	Pin Diameter E	Max Sprocket Face B	Depth of sidebar H	Width Over Lug J	Height of Lug G	Weight
			mm.	mm.	mm.	mm.	mm.	mm.	mm.	Kg/m
D 600	**600.D**	Acetal	63.5	43	11	18	28.5	-	-	1.44
D 600 TAB	**600.TAB.D**	Acetal	63.5	43	11	18	28.5	54	14	1.49

- Standard shipping lengths 96 pitches = 20 feet = 6.096 metres.

D 1400 Series

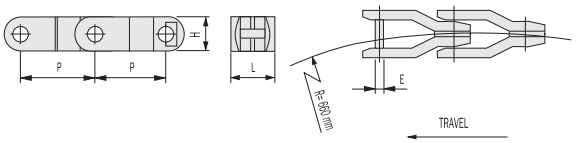

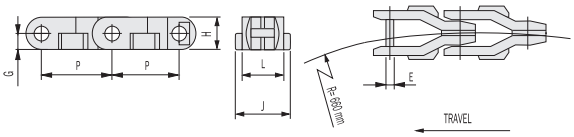

D 1400 - D 1400 TAB

Acetal Resin

- Plates in self-lubricating acetal resin, white-coloured.
- Pins in austenitic chrome-nickel stainless steel, work hardened for high resistance.

Chain Ref.	Magris code	Material	Pitch P	Width L	Pin Diameter E	Max Sprocket Face B	Depth of sidebar H	Width Over Lug J	Height of Lug G	Weight
			mm.	mm.	mm.	mm.	mm.	mm.	mm.	Kg/m
D 1400	**1400.D**	Acetal	82.5	50	9.5	18	38.5	-	-	1.44
D 1400 TAB	**1400.TAB.D**	Acetal	82.5	50	9.5	18	38.5	66	19.25	2.26

- Standard shipping lengths 74 pitches = 20 feet = 6.105 metres.

Thermoplastic straight running conveyor belts

730 Series

SAME DECK THICKNESS
AS THE SIDEFLEXING
CHAINS BELT 790 SERIES

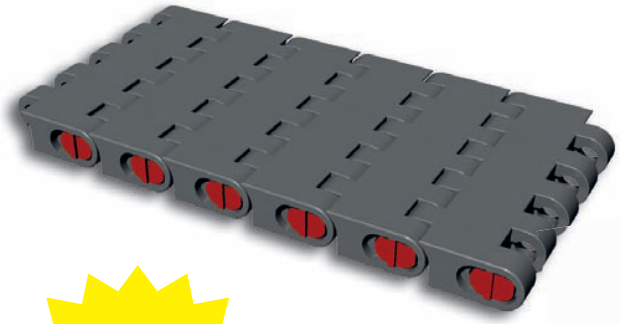

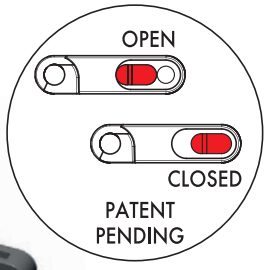

NEW PIN LOCK
SYSTEM

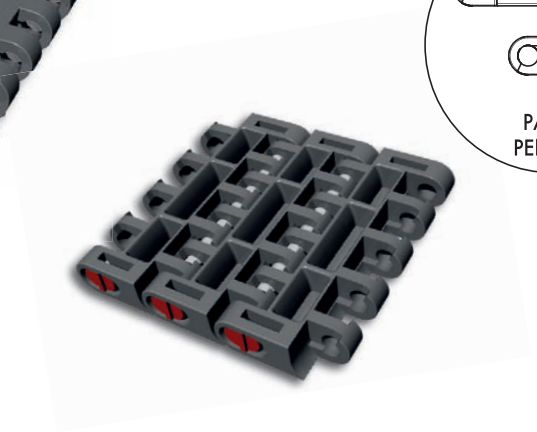

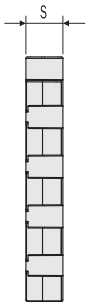

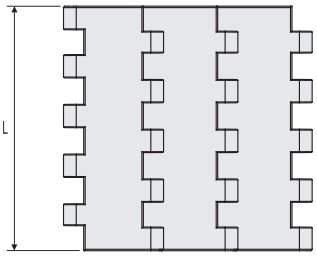

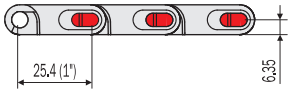

LFA 730

LOW FRICTION ACETAL RESIN

- Plates in self-lubricating low friction acetal resin, light brown or blue-coloured.
- Pins material: Pbt.

PRODUCT CODES	
LFA 730 K325	internal code 9.11.040
LFA 730 K330	internal code 9.11.042
LFA 730 K335	internal code 9.11.050
LFA 730 K450	internal code 9.11.080

CHARACTERISTICS	Width L (mm)	Thickness S (mm)	Weight kg/m
LFA 730 K325	82.5	12.7	1.18
LFA 730 K330	83.8	12.7	1.20
LFA 730 K335	85.0	12.7	1.22
LFA 730 K450	114.5	12.7	1.64

- Standard shipping lengths = 120 pitches = 10 feet = 3,048 metres.

SP 730

SUPER PERFORMANCE ACETAL RESIN

- Plates in self-lubricating very low friction acetal resin, dark grey-coloured.
- Pins material: Pbt.

PRODUCT CODES	
SP 730 K325	internal code 9.21.040
SP 730 K330	internal code 9.21.042
SP 730 K335	internal code 9.21.050
SP 730 K450	internal code 9.21.080

CHARACTERISTICS	Width L (mm)	Thickness S (mm)	Weight kg/m
SP 730 K325	82.5	12.7	1.18
SP 730 K330	83.8	12.7	1.20
SP 730 K335	85.0	12.7	1.22
SP 730 K450	114.5	12.7	1.64

- Standard shipping lengths = 120 pitches = 10 feet = 3,048 metres.

Available also in:
- WRX material black-colour (PA)
- PBT material green-colour (Polyester)
- AK material dark grey or yellow-colour (POM with aramidic fibers)
- WAF material white-colour (POM)
- PPB material white-colour (PP)

Thermoplastic straight running conveyor belts

730 PT Series with two positioners

SAME DECK THICKNESS
AS THE SIDEFLEXING
CHAINS BELT 790 SERIES

NEW PIN LOCK
SYSTEM

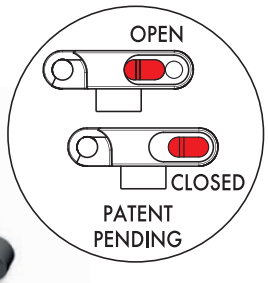

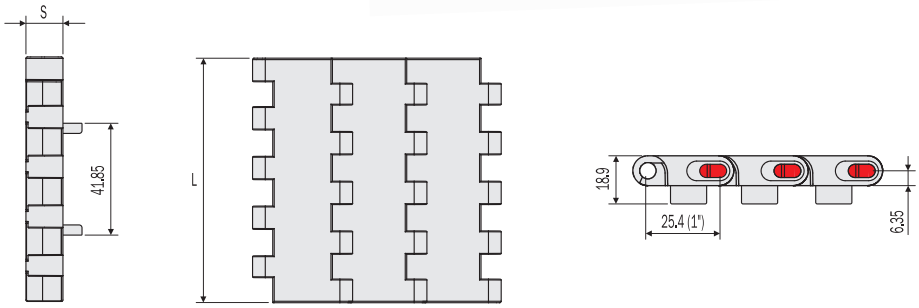

LFA 730 PT
LOW FRICTION ACETAL RESIN

- Plates in self-lubricating low friction acetal resin, light brown or blue-coloured.
- Pins material: Pbt.

PRODUCT CODES	
LFA 730 PT K325	internal code 9.11.040PT
LFA 730 PT K330	internal code 9.11.042PT
LFA 730 PT K335	internal code 9.11.050PT
LFA 730 PT K450	internal code 9.11.080PT

CHARACTERISTICS	Width L (mm)	Thickness S (mm)	Weight kg/m
LFA 730 PT K325	82.5	12.7	1.19
LFA 730 PT K330	83.8	12.7	1.21
LFA 730 PT K335	85.0	12.7	1.23
LFA 730 PT K450	114.5	12.7	1.65

- Standard shipping lengths = 120 pitches = 10 feet = 3,048 metres.

SP 730 PT
SUPER PERFORMANCE ACETAL RESIN

- Plates in self-lubricating very low friction acetal resin, dark grey-coloured.
- Pins material: Pbt.

PRODUCT CODES	
SP 730 PT K325	internal code 9.21.040PT
SP 730 PT K330	internal code 9.21.042PT
SP 730 PT K335	internal code 9.21.050PT
SP 730 PT K450	internal code 9.21.080PT

CHARACTERISTICS	Width L (mm)	Thickness S (mm)	Weight kg/m
SP 730 PT K325	82.5	12.7	1.19
SP 730 PT K330	83.8	12.7	1.21
SP 730 PT K335	85.0	12.7	1.23
SP 730 PT K450	114.5	12.7	1.65

- Standard shipping lengths = 120 pitches = 10 feet = 3,048 metres.

Available also in:
WRX material black-colour (PA)
PBT material green-colour (Polyester)
AK material dark grey or yellow-colour (POM with aramidic fibers)
WAF material white-colour (POM)
PPB material white-colour (PP)

MAGRIS Merit

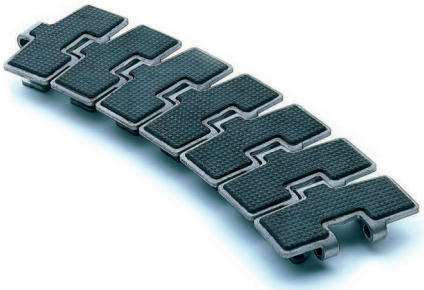

Sideflexing hinged slat chains with rubber inserts for inclined conveyors

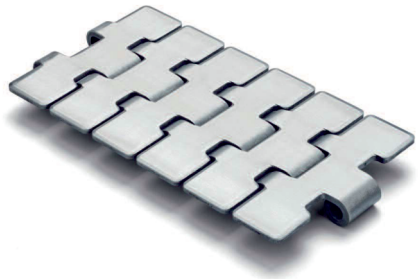

Straight running chains - Single hinge 1 inch

"1864" Straight running Plate Top chains

Sideflexing chains with thermoplastic Top Plates

Straight running chains with thermoplastic Top Plates

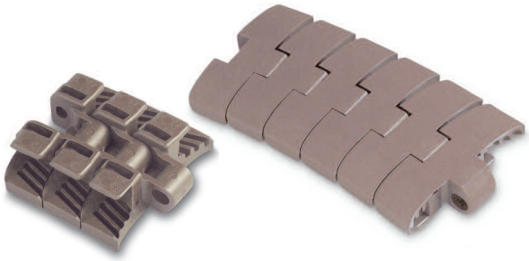

Thermoplastic sideflexing chains

Thermoplastic sideflexing chains

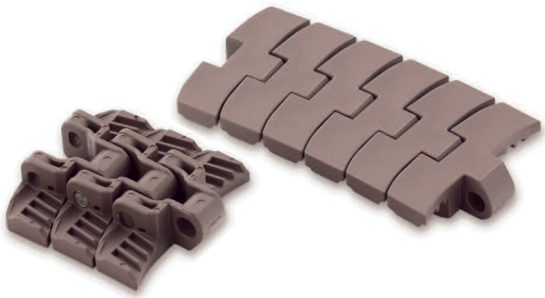

Thermoplastic sideflexing chains on magnetic tracks

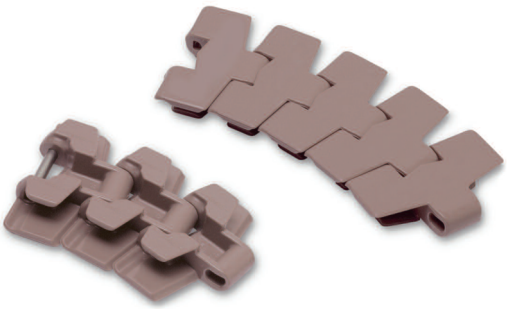

Thermoplastic sideflexing chains TAB type

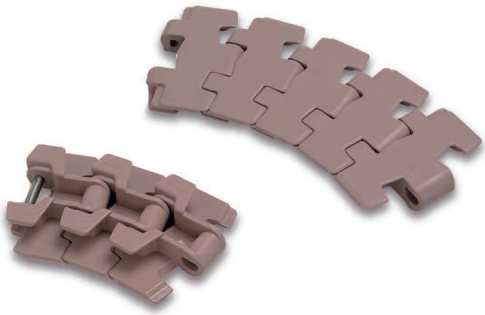

Thermoplastic sideflexing chains TAB type

Other Products

Thermoplastic sideflexing chains on magnetic tracks

Thermoplastic sideflexing chains on magnetic tracks

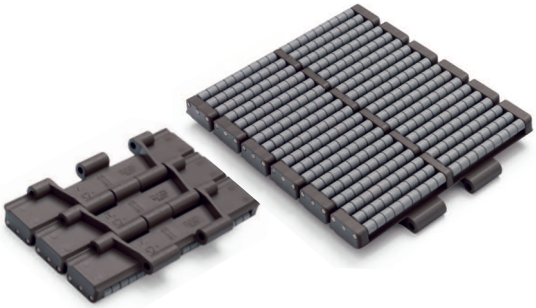

Thermoplastic straight running chains - Double hinge

Straight running chains with thermoplastic top plates

1843 Sideflexing chains with thermoplastic top plates

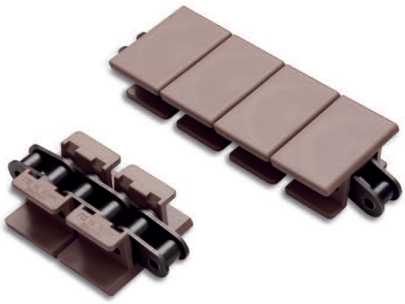

1863 Sideflexing chains with thermoplastic top plates

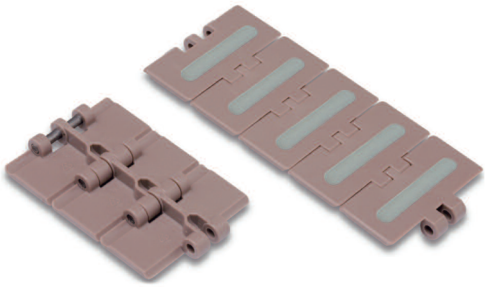

Thermoplastic straight running chains with rubber inserts Single hinge

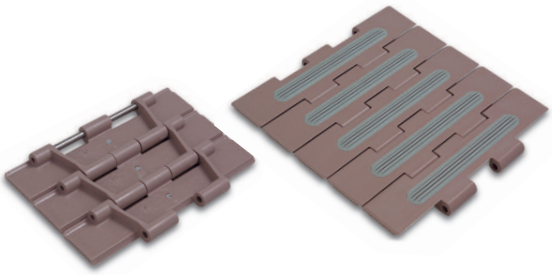

Thermoplastic straight running chains with rubber inserts Double hinge

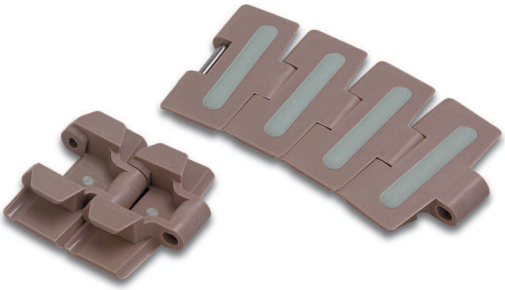

Thermoplastic sideflexing chains with rubber inserts

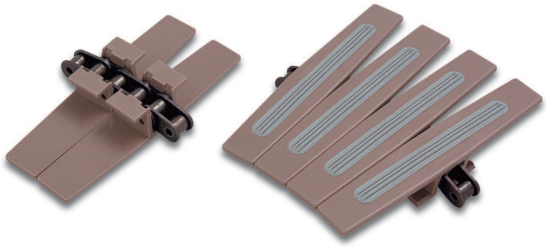

Sideflexing chains with thermoplastic top plates and rubber inserts

Sole Distributor :

Meritt

T.R.A.N.S.M.I.S.S.I.O.N.S

157/159, Narayan Dhuru Street,
Behind Nagdevi Street, Mumbai - 400 003. INDIA
Telephone : 2344 4956 / 2344 2857 / 2342 8342
Fax : 91-22-2341 4107
E-mail : sales@meritt.in
meritt2@meritt.in
Web Site: www.meritt.in

MAGRIS ITALY

www.magris.com

In accordance with the quality policy of Meritt Transmissions to constantly improve its products, specifications in this catalogue are subject to change without prior notice.

CAT 2

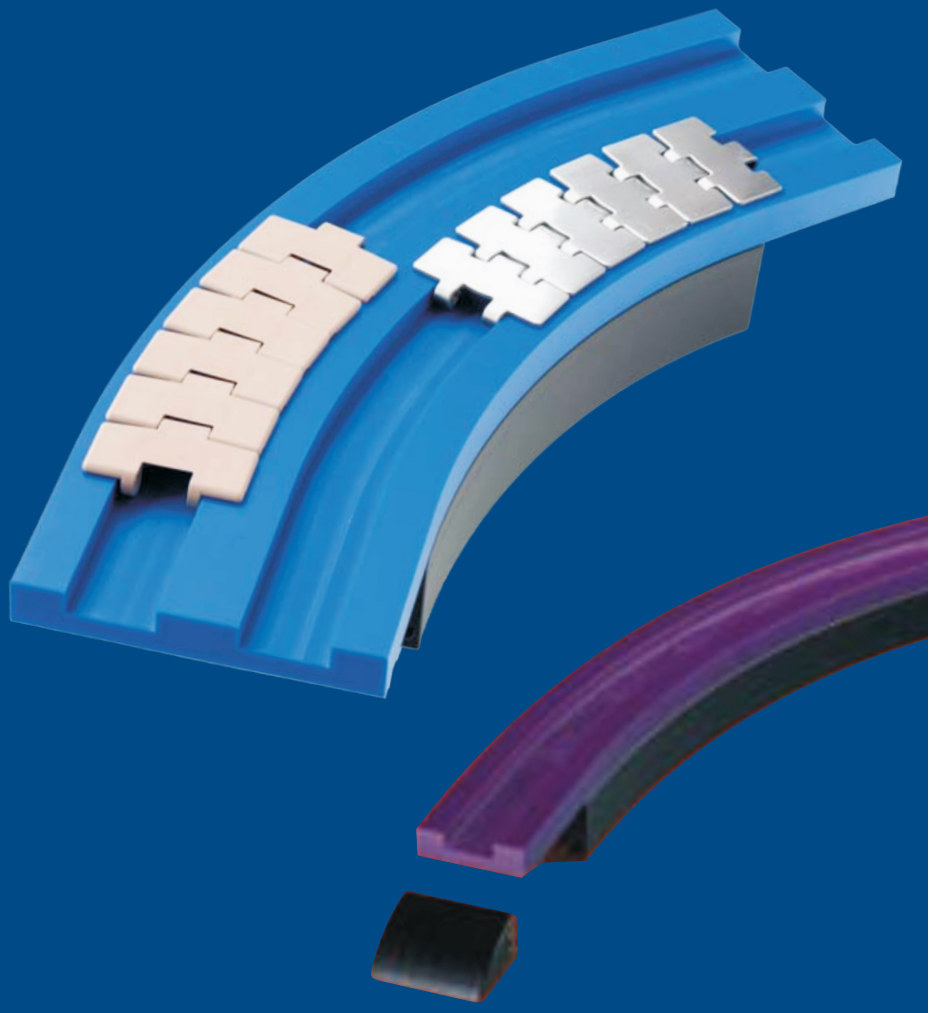

MAGNETIC CORNER TRACKS

ACCESSORIES

Components For Conveyors

MAGRIS ITALY

Merritt

Contents

Magneic Corner Track 3 1/4" width chain	23-24
Magnetic Corner Track 4 1/2" width chain	24
Magnetic Corner Track 7 1/2" width chain	25
Sideflexing Guide for TAB chain	26
Straight Guide for TAB chain	26
Sideflexing Guide for TOP PLATE Chain	27
Guide Rail Profile /Wear Strips	28-30
Neck Guide	30
Bottle Side Guide	31
Metal Profiles	31
Sprocket & Idler Wheels for S.S Straight & Magnetic Sideflexing chain	32
Sprocket for Thermoplastic Straight chain	33
Sprocket for S.S TAB Chain	33
Sprocket for Thermoplastic TAB & Sideflexing Magnetic chain	34
Sprocket for S.S Double Hinge chain	35
Machined Steel Sprocket for Straight & Tab chain	36
Conveyor Belts	37
Conveyor Designs	37-38
Other Products – Tripod & Bipod	39

magris

Magnetic curve is the ideal solution for your corners. Special integrated permanent magnets keep the chain in the curve. This system offers a flat carrying surface, therefore the best product stability and support. The complete curve consists of an upper part with magnets and a separate return part mounted together. The return infeed shoe will ensure smooth guiding of the chains into the return section.
Magnetic chains are also flatter since they have no tabs guides.
Clearing the curve can be done easily by lifting the chain. The curve surface is closed and smooth to avoid dirt accumulation.
This system provides a longer wearlife, because the bearing surface of the chains on the curve is larger than in other systems, and maintenance is easier.

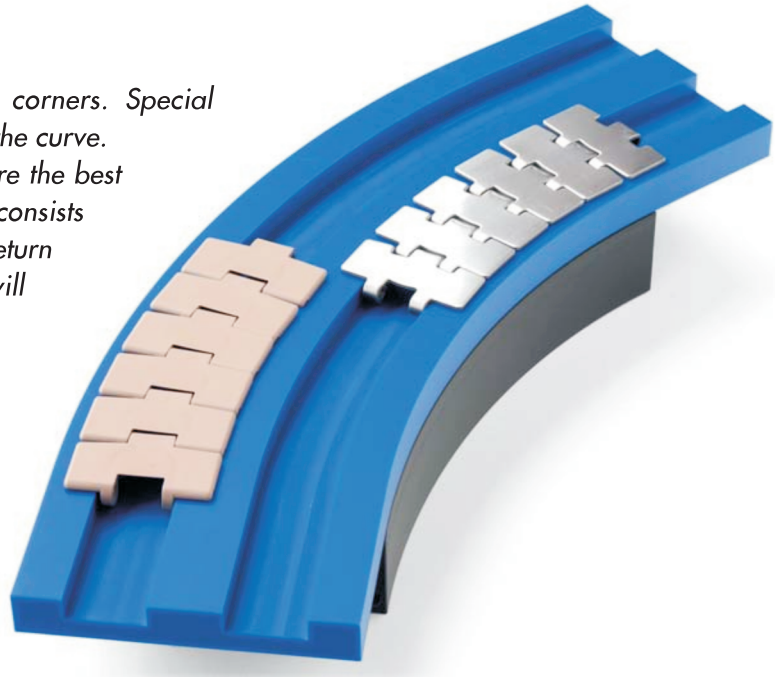

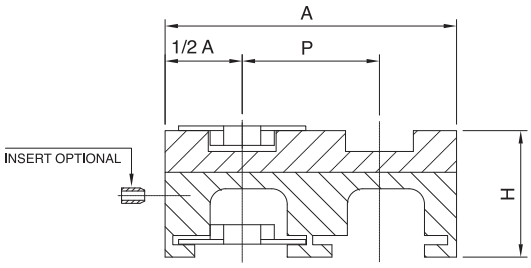

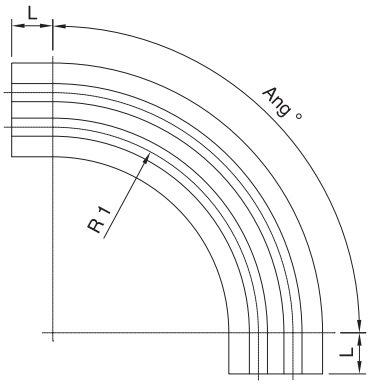

SELECTION TABLES									
Chains			RADIUS R	PITCH P	BASIC WIDTH A	INFEED LENGTH L	TOTAL HEIGHT H	VERSION	PAGE
CHAINS REF.	THICKNESS	HINGE							
FOR CHAINS WITH K325 - K330 PLATE WIDTH									
879 M K325 880 M K325 880 M K330 881 M K325 881 M K330	3 - 4	42,1	500	85	100	100	90	CM06	4
FOR CHAINS WITH K325 - K450 PLATE WIDTH									
879 M K450 880 M K450 881 M K450	3 - 4	42,1	610	120	129	125	90	CM22A	4
FOR CHAINS WITH K750 PLATE WIDTH									
880 M K750 881 M K750	3 - 4	42,1	860	-	214	0	82	CM66	5

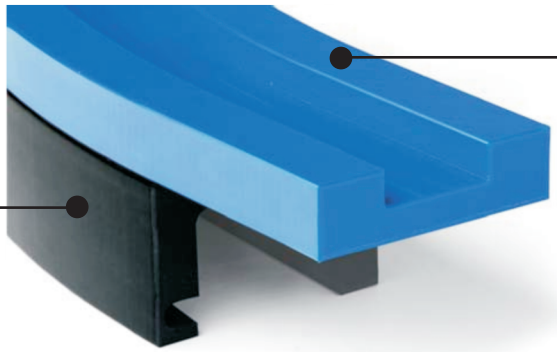

Upper Part
Material:
PE-UHMW Blue 8 million gr/mol, virgin. Special material studied for high wear resistance applications.

Return Part
Material:
PE-UHMW Black about 4 million gr/mol for high wear resistance.

** *Worldwide no restrictions for Magris magnetic curves used with stainless steel chains.*

(1) 3¼" Width Chain

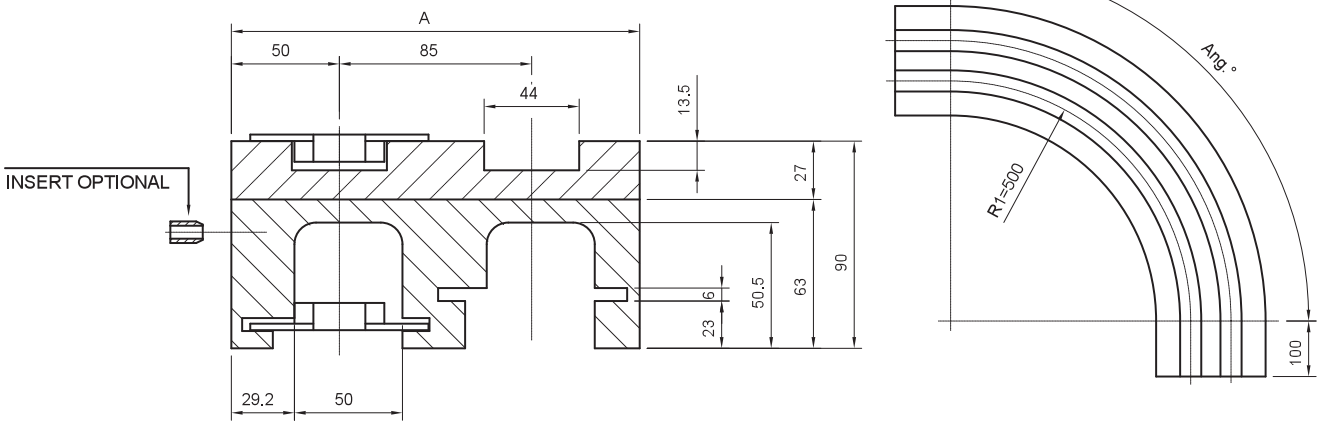

VERSION CM06							
Nr. of TRACKS	A	Curve angle 15°	30°	45°	60°	75°	90°
1	100	CM06 01 15	CM06 01 30	CM06 01 45	CM06 01 60	CM06 01 75	CM06 01 90*
2	185	CM06 02 15	CM06 02 30	CM06 02 45	CM06 02 60	CM06 02 75	CM06 02 90
3	270	CM06 03 15	CM06 03 30	CM06 03 45	CM06 03 60	CM06 03 75	CM06 03 90
4	355	CM06 04 15	CM06 04 30	CM06 04 45	CM06 04 60	CM06 04 75	CM06 04 90
5	440	CM06 05 15	CM06 05 30	CM06 05 45	CM06 05 60	CM06 05 75	CM06 05 90
6	525	CM06 06 15	CM06 06 30	CM06 06 45	CM06 06 60	CM06 06 75	CM06 06 90
7	610	CM06 07 15	CM06 07 30	CM06 07 45	CM06 07 60	CM06 07 75	CM06 07 90

Chains ref.
879 M K325
880 M K325
880 M K330
881 M K325
881 M K330
581 M K325

More than 7 tracks on request
** Normally Stocked*

(2) 4½" Width Chain

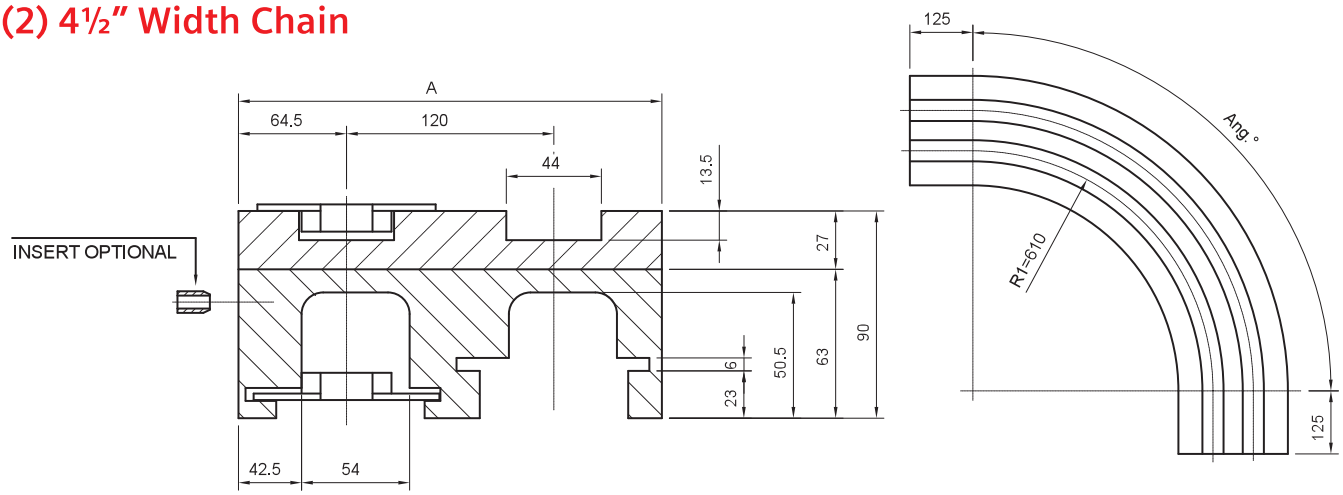

VERSION CM22A							
Nr. of TRACKS	A	Curve angle 15°	30°	45°	60°	75°	90°
1	129	CM22A 01 15	CM22A 01 30	CM22A 01 45	CM22A 01 60	CM22A 01 75	CM22A 01 90
2	249	CM22A 02 15	CM22A 02 30	CM22A 02 45	CM22A 02 60	CM22A 02 75	CM22A 02 90
3	369	CM22A 03 15	CM22A 03 30	CM22A 03 45	CM22A 03 60	CM22A 03 75	CM22A 03 90
4	489	CM22A 04 15	CM22A 04 30	CM22A 04 45	CM22A 04 60	CM22A 04 75	CM22A 04 90
5	609	CM22A 05 15	CM22A 05 30	CM22A 05 45	CM22A 05 60	CM22A 05 75	CM22A 05 90

Chains ref.
879 M K450
880 M K450
881 M K450

More than 5 tracks on request

3) 7½" Width Chain

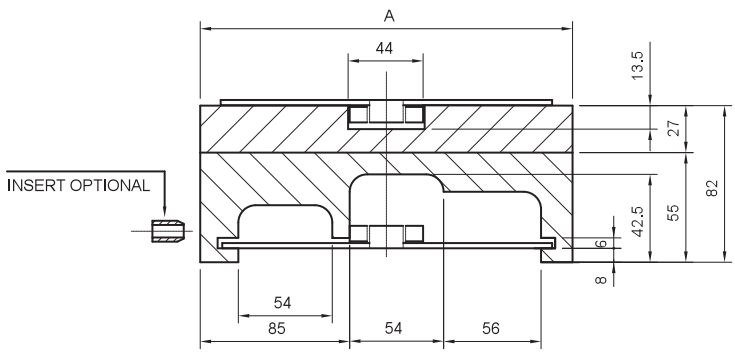

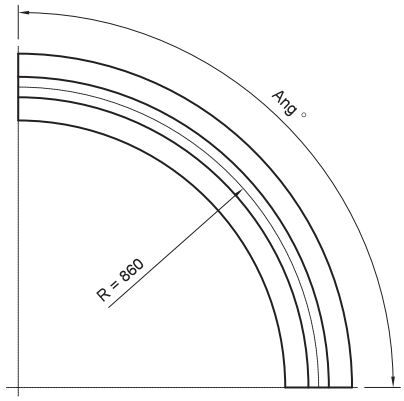

Chains ref.
880 M K750
881 M K750

VERSION CM66							
Nr. of TRACKS	A	Curve angle					
		15°	30°	45°	60°	75°	90°
1	214	CM66 01 15	CM66 01 30	CM66 01 45	CM66 01 60	CM66 01 75	CM66 01 90

More than 1 track on request

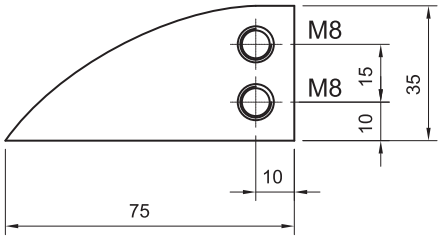

M8 brass insert, M10 on request.

SIDEFLEXING GUIDES FOR SIDEFLEXING TAB TYPE CHAINS
(for SS & Thermoplastic Chain - Chain No. LFA 880 TAB, 881 TAB, 8811 TAB)

Sideflexing guides for chains (3¼" Width)
82.5 K325 - 83.8 K330 P=90

TRACKS	A mm	R1=500	R1=610	R1=650	R1=800	R1=1000
1	100	CT182111*	CT182121	CT182131	CT182141	CT182151
2	190	CT182213	CT182223	CT182233	CT182243	CT182253
3	280	CT182313	CT182323	CT182333	CT182343	CT182353
4	370	CT182413	CT182423	CT182433	CT182443	CT182453
5	460	CT182513	CT182523	CT182533	CT182543	CT182553
6	550	CT182613	CT182623	CT182633	CT182643	CT182653

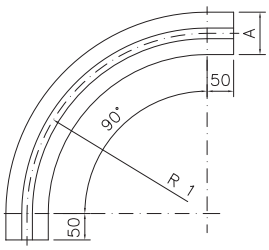

Sideflexing guides for chain (4½" Width)
114.3 K450 P=120

TRACKS	A mm	R1=610	R1=650	R1=800	R1=1000
1	130	CT111124*	CT111134	CT111144	CT111154
2	250	CT111224	CT111234	CT111244	CT111254
3	370	CT111324	CT111334	CT111344	CT111354
4	490	CT111424	CT111434	CT111444	CT111454
5	610	CT111524	CT111534	CT111544	CT111554
6	730	CT111624	CT111634	CT111644	CT111654

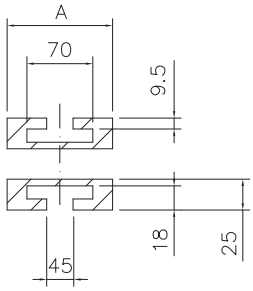

Sideflexing guides for chain (7½" Width)
190.5 K750 P=195

TRACKS	A mm	R1=610	R1=650	R1=800	R1=1000
1	200	CT119126*	CT119136	CT119146	CT119156
2	395	CT119226	CT119236	CT119246	CT119256
3	590	CT119326	CT119336	CT119346	CT119356
4	785	CT119426	CT119436	CT119446	CT119456

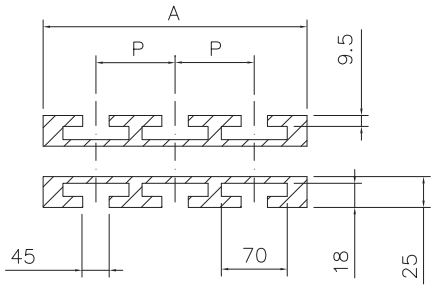

ALWAYS CHECK THE A DIMENSION

STRAIGHT GUIDES FOR TAB TYPE CHAINS
(880TAB/881TAB/8811TAB/1873TAB/1874TAB Series)

CHAIN TYPE	WIDTH	GUIDE CODE	A	B	C	D	E	F
880TAB K325	82.5	ST182100	100	45	67	25	18	9.5
881TAB K325								
8811TAB K325								
880TAB K450	114.3	ST111100	130					
881TAB K450								
8811TAB K450								
880TAB K750	190.5	ST119100	200					
881TAB K750								
8811TAB K750								
882TAB K450	114.3	ST211100	130	60	84	30	24	15
882TAB K750	190.5	ST219100	200					
882TAB K1000	254.0	ST225100	270					
882TAB K1200	304.8	ST230100	320					
1873/1874 TAB K325	82.5	ST482100	100	35	70	35	29	19
1873/1874 TAB K450	114.3	ST411100	130					
1873/1874 TAB K600	152.4	ST415100	170					
1873/1874 TAB K750	190.5	ST419100	200					
1873/1874 TAB K1000	254.0	ST425100	270					
1873/1874 TAB K1200	304.8	ST430100	320					

Supply: 1 piece; carry return sections and return plates are supplied separately.

** Normally Stocked*

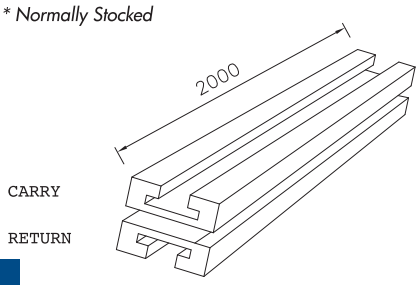

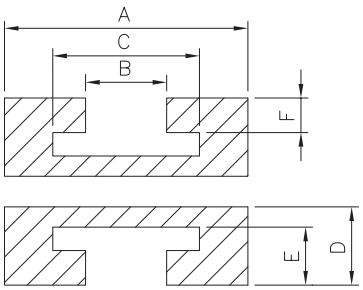

SIDEFLEXING GUIDES FOR TAB TYPE CHAINS WITH TOP PLATES
(for SS & Thermoplastic Chain - Chain No. 1873 / 1874 Series)

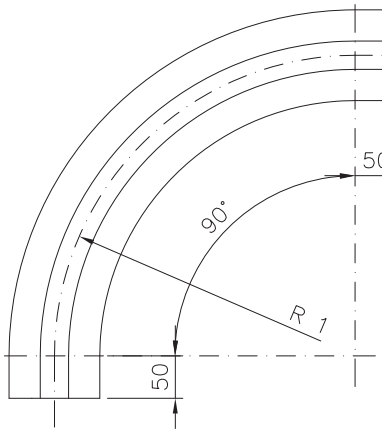

Sideflexing guides for chain
82.5 K325 P=90

TRACKS	A mm	R1=500	R1=610	R1=650	R1=800	R1=1000
1	100	CT48211	CT48212	CT48213	CT48214	CT48215
2	190	CT482213	CT482223	CT482233	CT482243	CT482253
3	280	CT482313	CT482323	CT482333	CT482343	CT482353
4	370	CT482413	CT482423	CT482433	CT482443	CT482453

Sideflexing guides for chain
114.3 K450 P=120

TRACKS	A mm	R1=380	R1=500	R1=610	R1=650	R1=800	R1=1000
1	130	CT411104	CT411114	CT411124	CT411134	CT411144	CT411154
2	250	CT411204	CT411214	CT411224	CT411234	CT411244	CT411254
3	370	CT411304	CT411314	CT411324	CT411334	CT411344	CT411354
4	490	CT411404	CT411414	CT411424	CT411434	CT411444	CT411454

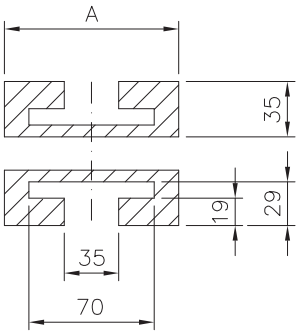

Sideflexing guides for chain
152.4 K600 P=160

TRACKS	A mm	R1=500	R1=610	R1=650	R1=800	R1=1000
1	170	CT415115	CT415125	CT415135	CT415145	CT415155
2	330	CT415215	CT415225	CT415235	CT415245	CT415255
3	490	CT415315	CT415325	CT415335	CT415345	CT415355
4	650	CT415415	CT415425	CT415435	CT415445	CT415455

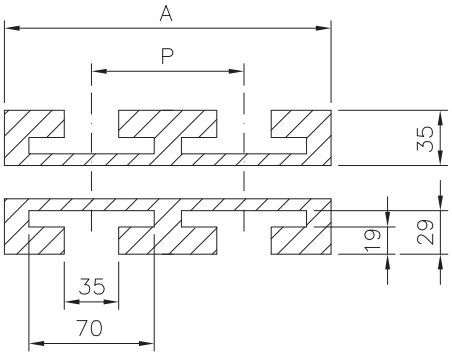

Sideflexing guides for chain
190.5 K750 P=195

TRACKS	A mm	R1=500	R1=610	R1=650	R1=800	R1=1000
1	200	CT419116	CT419126	CT419136	CT419146	CT419156
2	390	CT419216	CT419226	CT419236	CT419246	CT419256
3	590	CT419316	CT419326	CT419336	CT419346	CT419356
4	785	CT419416	CT419426	CT419436	CT419446	CT419456

Sideflexing guides for chain
254.0 K1000 P=260

TRACKS	A mm	R1=500	R1=610	R1=650	R1=800	R1=1000
1	270	CT425117	CT425127	CT425137	CT425147	CT425157
2	530	CT425217	CT425227	CT425237	CT425247	CT425257

Sideflexing guides for chain
304.8 K1200 P=310

TRACKS	A mm	R1=500	R1=610	R1=650	R1=800	R1=1000
1	320	CT430118	CT430128	CT430138	CT430148	CT430158
2	630	CT430218	CT430228	CT430238	CT430248	CT430258

ALWAYS CHECK THE A DIMENSION

MAGRIS Meritt

GUIDE RAIL PROFILES (WEAR STRIPS) FOR CONVEYOR CHAINS

L standard

CODE	COLOUR	BARS	COILS	MATERIAL
PL000V	green	NO	50 mt	PEUHMW
PL000N	black	NO	50 mt	PEUHMW

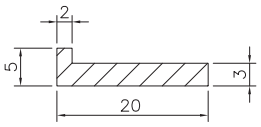

LK

CODE	COLOUR	BARS	COILS	MATERIAL
PLK00V	green	NO	40 mt	PEUHMW
PLK00N	black	NO	40 mt	PEUHMW

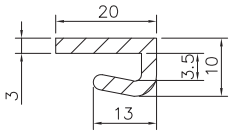

LK40

CODE	COLOUR	BARS	COILS	MATERIAL
PLK40V	green	NO	50 mt	PEUHMW
PLK40N	black	NO	50 mt	PEUHMW

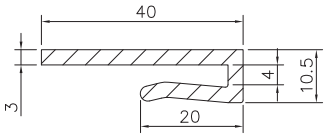

Z standard

CODE	COLOUR	BARS	COILS	MATERIAL
PZ000V	green	NO	50 mt	PEUHMW
PZ000N	black	NO	50 mt	PEUHMW

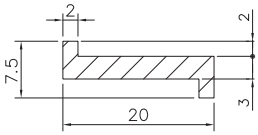

ZR

CODE	COLOUR	BARS	COILS	MATERIAL
PZR00V	green	NO	50 mt	PEUHMW
PZR00N*	black	NO	50 mt	PEUHMW

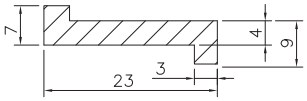

MTR 424

CODE	COLOUR	BARS	COILS	MATERIAL
MTR424	green	NO	50/60 mt	PEUHMW

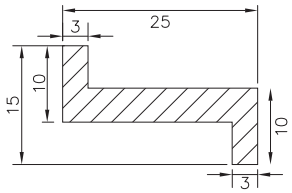

ZK

CODE	COLOUR	BARS	COILS	MATERIAL
PZK00V	green	NO	40 mt	PEUHMW
PZK00N*	black	NO	40 mt	PEUHMW

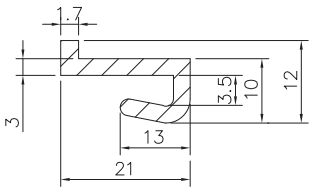

MTR 10

CODE	COLOUR	BARS	COILS	MATERIAL
MTR10	green	NO	50/60 mt	PEUHMW

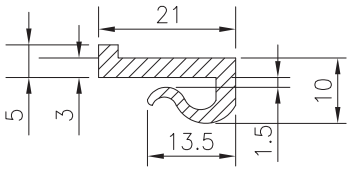

MTR 275

CODE	COLOUR	BARS	COILS	MATERIAL
MTR275	green	NO	50/60 mt	PEUHMW

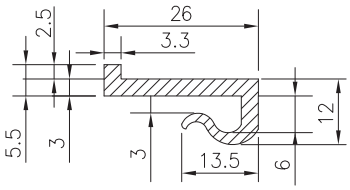

GUIDE RAIL PROFILES (WEAR STRIPS) FOR CONVEYOR CHAINS

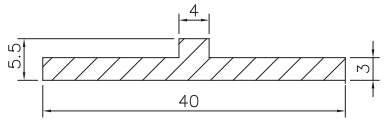

T standard

CODE	COLOUR	BARS	COILS	MATERIAL
PT000V	green	NO	50/80 mt	PEUHMW
PT000N	black	NO	50 mt	PEUHMW

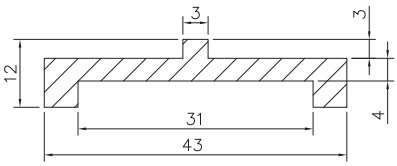

TR

CODE	COLOUR	BARS	COILS	MATERIAL
PTR00V	green	6 mt	60 mt	PEUHMW
PTR00N	black	6 mt	50 mt	PEUHMW

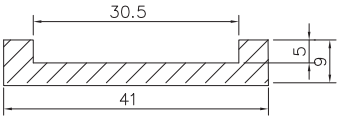

U

CODE	COLOUR	BARS	COILS	MATERIAL
PU000V	green	6 mt	50 mt	PEUHMW
PU000N*	black	6 mt	50 mt	PEUHMW

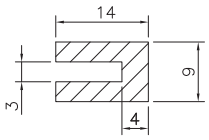

GL

CODE	COLOUR	BARS	COILS	MATERIAL
PGL00N	black	2/3/6 mt	NO	PEUHMW

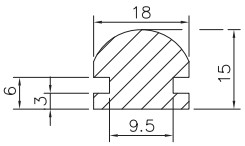

RP

CODE	COLOUR	BARS	COILS	MATERIAL
PRP00V	green	2/3/6 mt	NO	PEUHMW
PRP00N	black	2/3/6 mt	NO	PEUHMW
PRP00W	white	2/3/6 mt	NO	PEUHMW

minimum order 30 mt for article CODE PRP00V and 60 mt for article CODE PRP00N
** Normally Stocked*

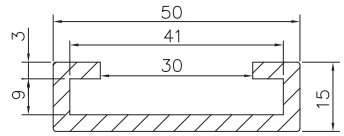

C 40x8

CODE	COLOUR	BARS	COILS	MATERIAL
P4080V	green	2/3/4 mt	NO	PEUHMW
P4080N	black	2/3/4 mt	NO	PEUHMW

minimum order 96 mt

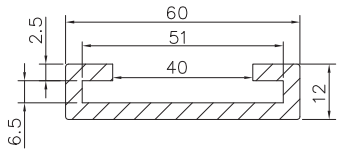

C 50x5

CODE	COLOUR	BARS	COILS	MATERIAL
P5050N*	black	2/3/6 mt	NO	PEUHMW

** Normally Stocked*

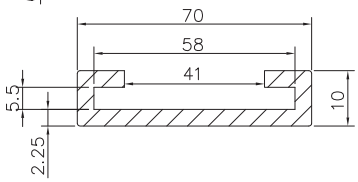

C 50x6

CODE	COLOUR	BARS	COILS	MATERIAL
P5060V	green	2/3/4 mt	NO	PEUHMW
P5060N	black	2/3/4 mt	NO	PEUHMW

minimum order 30 mt

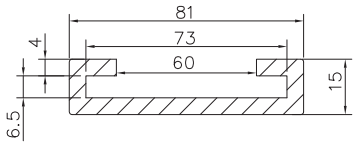

C 70x6

CODE	COLOUR	BARS	COILS	MATERIAL
P7060V	green	2/3/4 mt	NO	PEUHMW
P7060N	black	2/3/4 mt	NO	PEUHMW

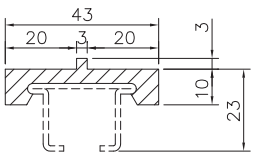

C 43x13

CODE	COLOUR	BARS	PACK	MATERIAL
P4313V	green	2/3/6 mt	36 mt	PEUHMW
P4313N*	black	2/3/6 mt	36 mt	PEUHMW

* on request

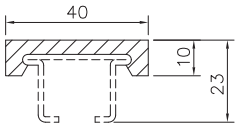

C 40x10

CODE	COLOUR	BARS	PACK	MATERIAL
P4010V	green	2/3/6 mt	36 mt	PEUHMW
P4010N*	black	2/3/6 mt	36 mt	PEUHMW

* on request

GUIDE RAIL PROFILES (WEAR STRIPS) FOR CONVEYOR CHAINS

Metal profile OMEGA

CODE	BARS	PACK	MATERIAL
M3019S	2/3/6 mt	36 mt	AISI430
M3019SS	2/3/6 mt	36 mt	AISI304

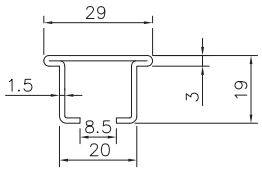

Metal profile 40x6

CODE	BARS	PACK	MATERIAL
PM406ZN	2/3/6 mt	36 mt	ZnplSt
PM406SS	2/3/6 mt	36 mt	AISI304

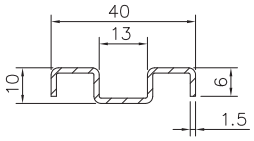

Metal profile 40x8

CODE	BARS	PACK	MATERIAL
PM408ZN	2/3/6 mt	36 mt	ZnplSt
PM408SS	2/3/6 mt	36 mt	AISI304

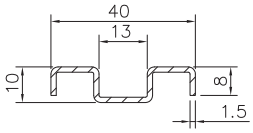

Metal profile 40x10

CODE	BARS	PACK	MATERIAL
PM4010ZN	2/3/6 mt	36 mt	ZnplSt
PM4010SS	2/3/6 mt	36 mt	AISI304

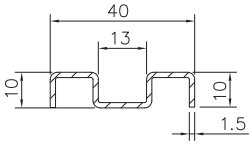

Profile 12

CODE	COLOUR	BARS	PACK	MATERIAL
PR12WS	white	3/6 mt	24/48mt	PEUHMW
PR12WSS	white	3/6 mt	24/48mt	PEUHMW
PR12AS*	AS black	3/6 mt	24/48mt	PEUHMW
PR12ASS*	AS black	3/6 mt	24/48mt	PEUHMW

* on request

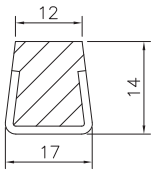

NECK GUIDE

CODE	COLOR	BARS	COILS	MATERIAL
MTR118	Green	No	50/60 mt	PEUHMW

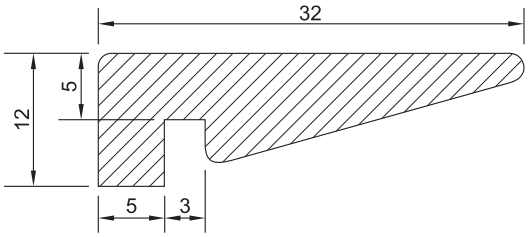

CODE	COLOR	BARS	COILS	MATERIAL
MTS119	Green	No	50/60 mt	PEUHMW

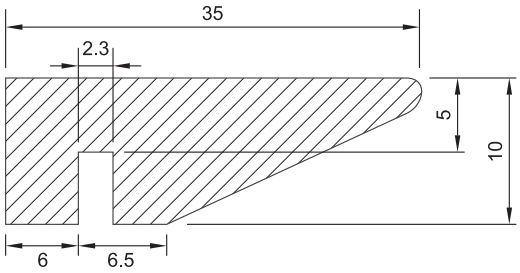

CODE	COLOR	BARS	COILS	MATERIAL
MTM120	Green	No	45 mt	PEUHMW

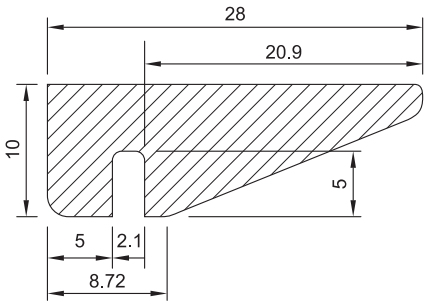

GUIDE RAIL PROFILES (WEAR STRIPS) FOR CONVEYOR CHAINS

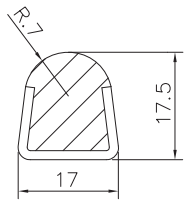

Profile R7

CODE	COLOUR	BARS	PACK	MATERIAL
PR7WS	white	3/6 mt	24/48mt	PEUHMW
PR7WSS	white	3/6 mt	24/48mt	PEUHMW
PR7AS*	AS black	3/6 mt	24/48mt	PEUHMW
PR7ASS*	AS black	3/6 mt	24/48mt	PEUHMW

* on request

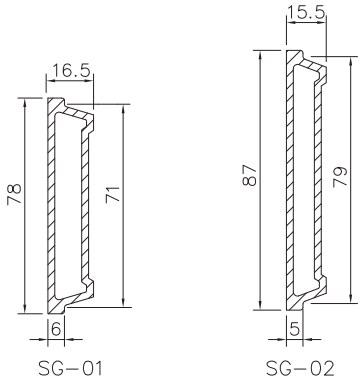

SG–01

CODE	COLOUR	COILS	BARS
PSG10B	blue	NO	2/3/6 mt
PSG10N	black	NO	2/3/6 mt

minimum 30 mt

SG–02

CODE	COLOUR	COILS	BARS
PSG20B	blue	NO	2/3/6 mt
PSG20N	black	NO	*2/3/6 mt

minimum 30 mt

* Normally Stocked

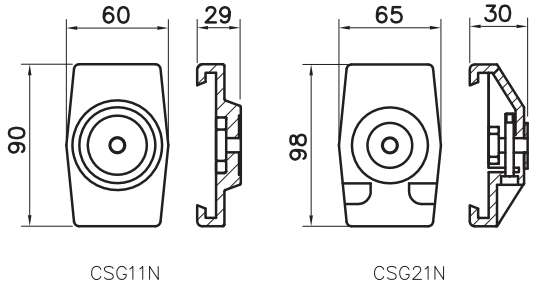

Clamps for SG–01

CODE	COLOUR
CSG11N	black

minimum 50 pcs

Clamps for SG–02

CODE	COLOUR
CSG21N	black

minimum 100 pcs

METAL PROFILES

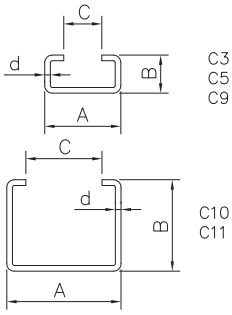

Metal profile C3/C5/C9

CODE	A	B	C	d	BARS	MATERIAL
MC3S	20	10	10	1.3	2/3/6 mt	ZnplSt
MC3SS	20	10	10	1.3	2/3/6 mt	AISI304
MC5S	28	12	14	1.8	2/3/6 mt	ZnplSt
MC5SS	28	12	14	1.8	2/3/6 mt	AISI304
MC9S	38	18	22	1.5	2/3/6 mt	ZnplSt
MC9SS	38	18	22	1.5	2/3/6 mt	AISI304

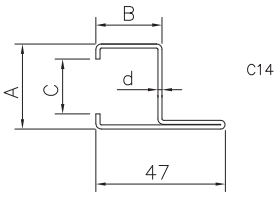

Metal profile C10/C11

CODE	A	B	C	d	BARS	MATERIAL
MC10S	30	24	20	1.5	2/3/6 mt	ZnplSt
MC10SS	30	24	20	1.5	2/3/6 mt	AISI304
MC11S	45	40	31	1.5	2/3/6 mt	ZnplSt
MC11SS	45	40	31	1.5	2/3/6 mt	AISI304

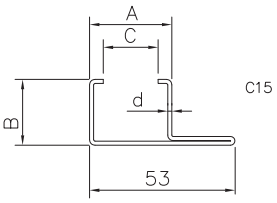

Metal profile C14/C15

CODE	A	B	C	d	BARS	MATERIAL
MC14S	31	25	20	2.0	2/3/6 mt	ZnplSt
MC14SS	31	25	20	2.0	2/3/6 mt	AISI304
MC15S	31	25	20	2.0	2/3/6 mt	ZnplSt
MC15SS	31	25	20	2.0	2/3/6 mt	AISI304

36 mt pack for all profiles

INJECTED SPROCKETS AND IDLER WHEELS
(for SS Straight Running & Magnetic Sideflexing Chain - 812/815/881M Series)

Split sprockets
material: reinforced polyamide - screws in stainless steel nuts in nickel plated brass - UNI 6604-69 key seat

CODE	Z	De	A	B	Df
S10021 25*	21	129.0	67.8	116.1	25
S10021 30					30
S10021 35*					35
S10021 40					40
S10021 45					45
S10023 25	23	142.0	73.8	128.1	25
S10023 30					30
S10023 35					35
S10023 40					40
S10023 45					45
S10025 25	25	154.0	79.8	140.1	25
S10025 30					30
S10025 35					35
S10025 40*					40
S10025 45					45

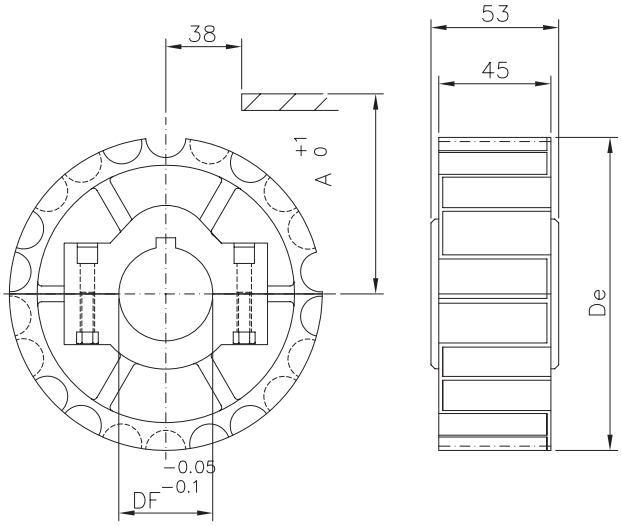

Drive sprockets
material: reinforced polyamide - screws in stainless steel UNI 6604-69 key seat

CODE	Z	De	Dp	A	B	Df
S00017 25	17	104.7	105.48	/	/	25
S00017 30						30
S00019 25	19	117.0	117.34	61.9	104.2	25
S00019 30						30
S00019 35						35
S00019 40						40
S00021 25	21	129.0	129.26	67.8	116.1	25
S00021 30						30
S00021 35						35
S00021 40						40
S00023 25	23	142.0	141.21	73.8	128.1	25
S00023 30						30
S00023 35						35
S00023 40						40
S00025 25	25	154.0	153.21	79.8	140.1	25
S00025 30						30
S00025 35						35
S00025 40						40

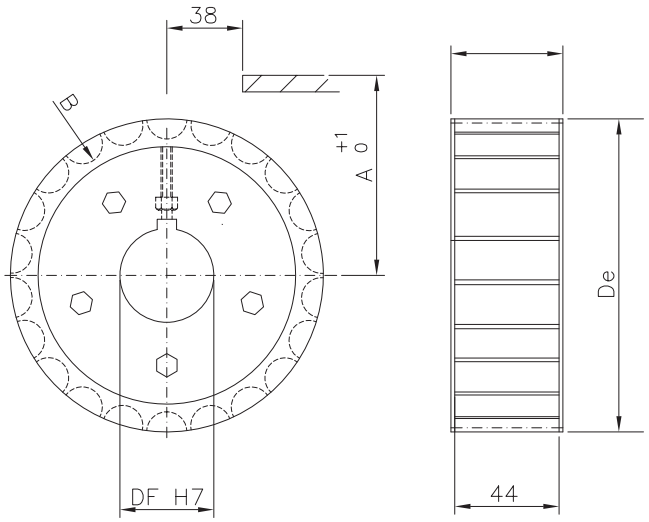

Standard idler wheels reinforced series
material: self lubricating polyamide
colour: black

CODE	Z eq.	De	A	Df
P00617 25	17	106.5	57.0	25
P00617 30				30
P00618 25	18	113.0	92.0	25
P00618 30				30
P00619 20	19	117.0	62.6	20
P00619 25				25
P00619 30				30
P00619 35				35
P00619 40				40
P00621 20	21	129.8	68.6	20
P00621 25*				25
P00621 30				30
P00621 35*				35
P00621 40				40
P00623 20	23	142.2	74.6	20
P00623 25				25
P00623 30				30
P00623 35				35
P00623 40				40
P00625 20	25	154.7	80.5	20
P00625 25				25
P00625 30				30
P00625 35				35
P00625 40*				40

** Normally Stocked*

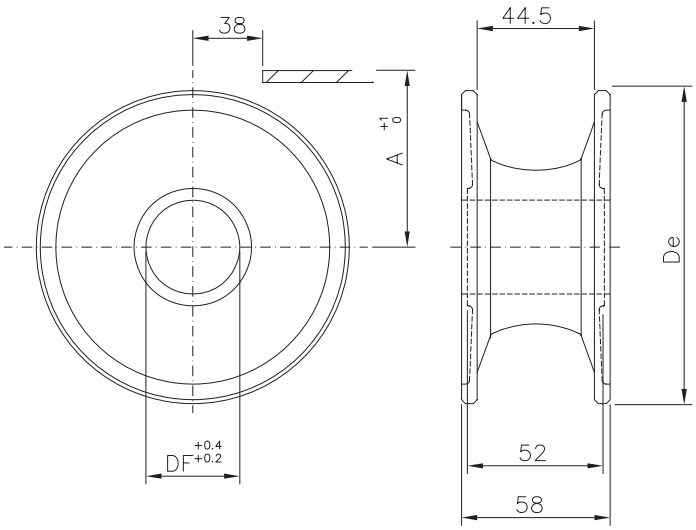

INJECTED SPROCKETS FOR THERMOPLASTIC STRAIGHT RUNNING CHAIN - 820 Series

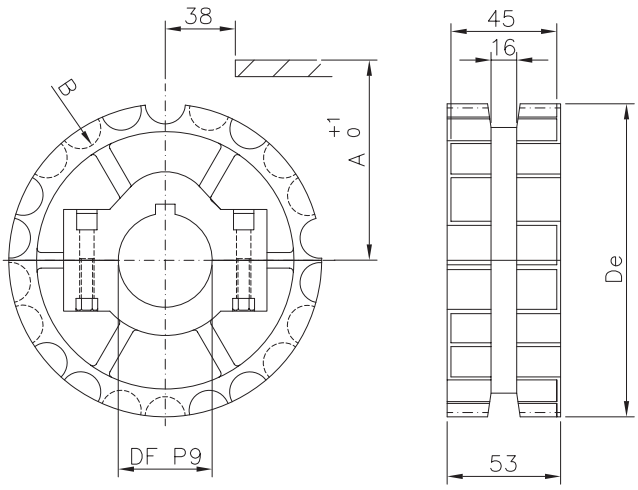

Split sprockets
material: reinforced polyamide - screws in stainless steel, nuts in nickel plated steel / UNI 6604-69 key seat

CODE	Z	De	B	A	Df
S10621 25	21	129.0	116.1	67.8	25
S10621 30					30
S10621 35					35
S10621 40					40
S10621 45					45
S10623 25	23	142.0	128.1	73.8	25
S10623 30					30
S10623 35					35
S10623 40					40
S10623 45					45
S10625 25	25	154.0	140.1	79.8	25
S10625 30					30
S10625 35					35
S10625 40					40
S10625 45					45

** Normally Stocked*

Note : The idler wheel (drum) for the above chain is same as of straight chain

INJECTED SPROCKETS FOR SS SIDEFLEXING TAB CHAIN - 881TAB/8811TAB Series

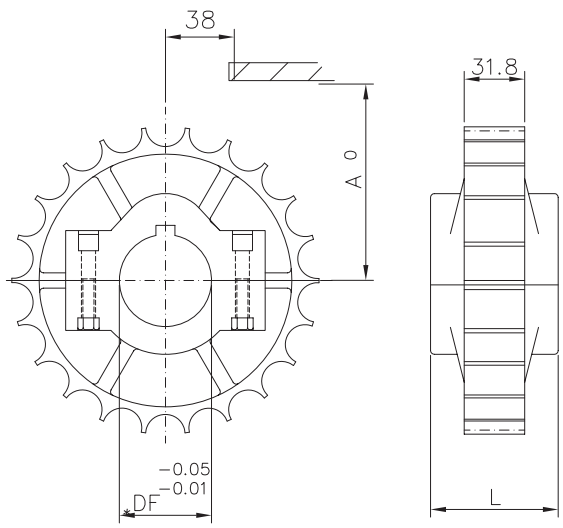

Split sprockets
material: reinforced polyamide - screws in stainless steel, nuts in nickel plated brass / UNI 6604-69 key seat

CODE	Z	De	A	B	L	Df
S10421 25	21	129.0	67.8	116.1	51.0	25
S10421 30						30
S10421 35						35
S10421 40						40
S10421 45						45
S10423 25	23	142.0	73.8	128.1	51.0	25
S10423 30						30
S10423 35						35
S10423 40						40
S10423 45						45
S10425 25	25	154.0	79.8	140.1	58.5	25
S10425 30						30
S10425 35						35
S10425 40						40
S10425 45						45

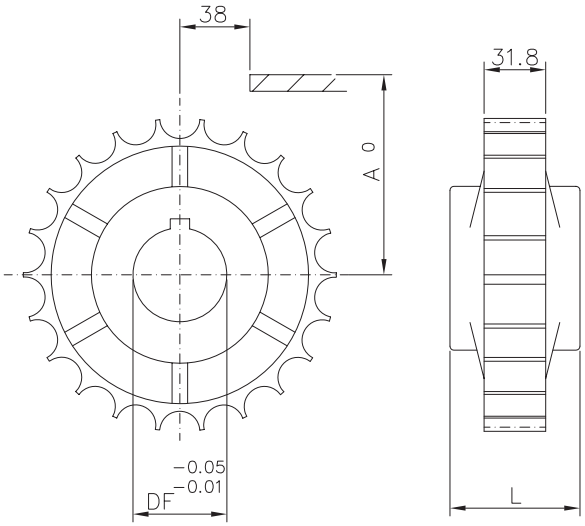

Standard sprockets
material: polyamide
UNI 6604-69 key seat

CODE	Z	De	Dp	A	L	Df
S00421 25	21	129.0	129.26	67.8	51.0	25
S00421 30						30
S00421 35						35
S00421 40						40
S00425 25	25	154.0	153.2	79.8	58.5	25
S00425 30						30
S00425 35						35
S00425 40						40

INJECTED SPROCKETS FOR THERMO PLASTIC TAB CHAIN & SIDEFLEXING MAGNEFLEX CHAIN - 878 TAB/879 TAB/880 TAB/880M Series

Split sprockets
material: reinforced polyamide - screws in stainless steel, nuts in nickel plated brass / UNI 6604-69 key seat

CODE	Z	De	Dp	A	B	Df
S10810 25	10	122.0	123.3	65.25	107.0	25
S10810 30						30
S10810 35						35
S10810 40						40
S10812 25	12	147.0	146.8	77.2	131.0	25
S10812 30						30
S10812 35						35
S10812 40						40

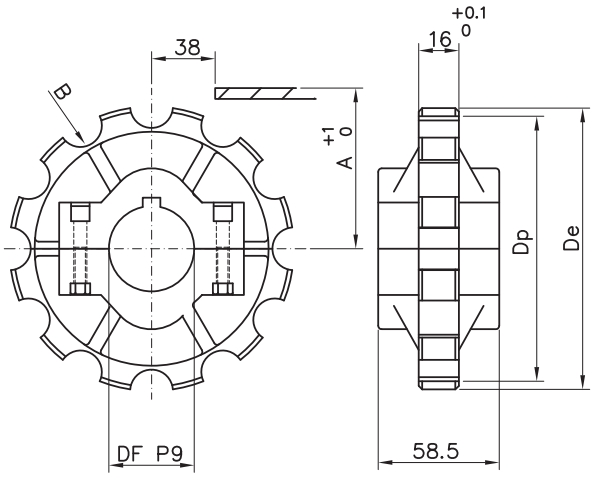

INJECTED IDLER WHEELS - 879/879M/880/880M Series

Idler wheels
material: self-lubricating polyamide - screws in zinc plated steel

CODE	Z eq.	De	Dg	A	A1	A2	Df
K00608 25	08	106.0	71.0	56.2	44.0	52.0	25
K00608 30							30
K00609 25	09	118.0	80.0	62.6	44.0	60.0	25
K00609 30							30
K00609 35							35
K00609 40							40
K00610 25	10	129.8	80.0	68.6	44.0	60.0	25
K00610 30							30
K00610 35							35
K00610 40							40
K00611 25	11	142.5	108.0	74.6	44.0	60.0	25
K00611 30							30
K00611 35							35
K00611 40							40
K00612 25	12	155.0	108.0	80.5	44.0	60.0	25
K00612 30							30
K00612 35							35
K00612 40							40

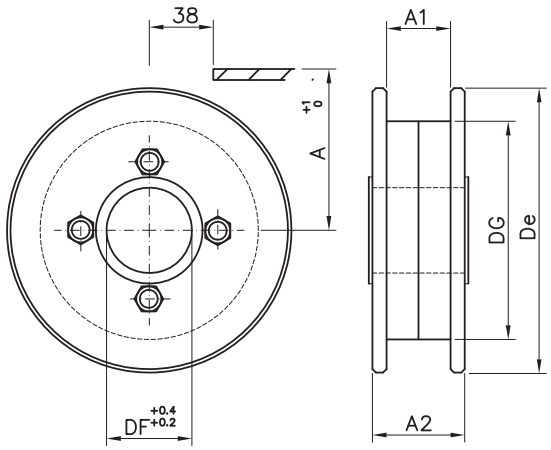

INJECTED SPROCKETS - 802/805 Series

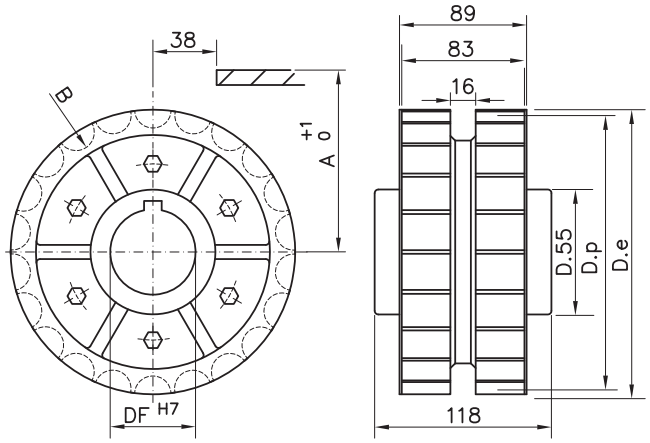

Drive sprockets
material: reinforced polyamide - screws in stainless steel
UNI 6604-69 key seat

CODE	Z	De	Dp	A	B	Df
S00225 25	25	154.0	153.2	79.8	140.1	25
S00225 30						30
S00225 35						35
S00225 40						40

INJECTED IDLER WHEELS - 802/805 Series

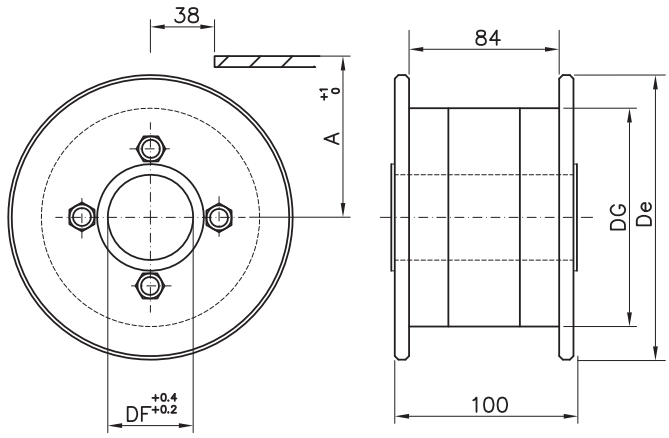

Self-lubricating standard idler wheels
material: self-lubricating polyamide
screws in zinc plated steel / colour: black

CODE	Z eq.	De	Dg	A	Df
K00219 25	19	118.0	80.0	62.6	25
K00219 30					30
K00219 35					35
K00219 40					40
K00221 25	21	129.8	80.0	68.6	25
K00221 30					30
K00221 35					35
K00221 40					40
K00223 25	23	142.5	108.0	74.6	25
K00223 30					30
K00223 35					35
K00223 40					40
K00225 25	25	155.0	108.0	80.5	25
K00225 30					30
K00225 35					35
K00225 40					40

MACHINED SPROCKETS - 802/804/805 Series

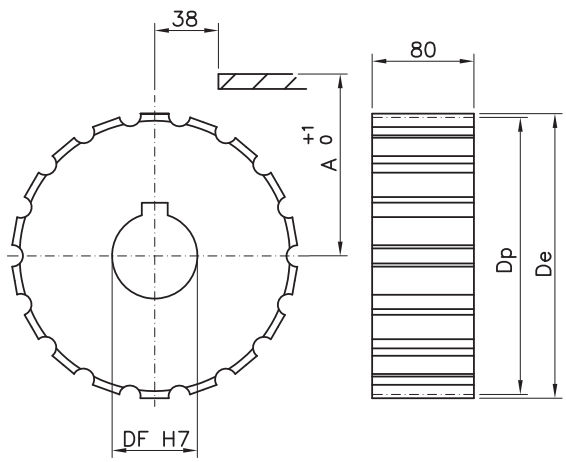

Standard sprockets
material: polyamide
UNI 6604-69 key seat

CODE	Z	De	Dp	A	Df
S01719 25	19	117.0	117.34	61.9	25
S01719 30					30
S01719 35					35
S01719 40					40
S01721 25	21	129.0	129.26	67.8	25
S01721 30					30
S01721 35					35
S01721 40					40
S01723 25	23	142.0	141.21	73.8	25
S01723 30					30
S01723 35					35
S01723 40					40
S01725 25	25	154.0	153.21	79.8	25
S01725 30					30
S01725 35					35
S01725 40					40
S01727 25	27	166.8	165.2	85.8	25
S01727 30					30
S01727 35					35
S01727 40					40
S01729 25	29	178.5	177.24	91.8	25
S01729 30					30
S01729 35					35
S01729 40					40

MACHINED STEEL SPROCKETS FOR STRAIGHT RUNNING CHAINS - (812) and for SideFlexing Magnetic Chains (881M)

The Sprocket tooth pitch (mm 19,05) is half the pitch of the chain (38,1 mm). Therefore, when a sprocket with an odd number of teeth is used, the teeth engage the chain only every other revolution.
This doubles the life of sprockets.

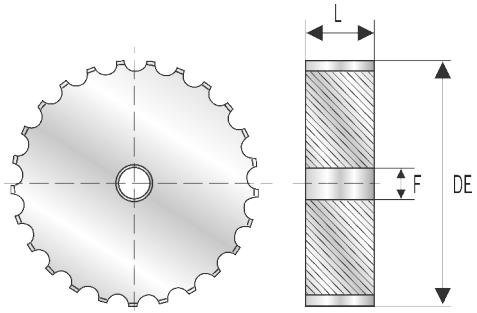

Material: Cast Iron / M.S

Code	Width (mm) (L)	Number of Teeth (z)	DE Outside Diameter (mm)	Pitch Diameter (mm)	F Plain Bore Diameter (mm)	Weight kg/unit
8.12.005	43.50	15	92.90	93.70	20.0	1.86
8.12.010	43.50	17	104.70	105.47	20.0	2.34
8.12.020	43.50	19	117.10	117.35	20.0	3.05
8.12.030	43.50	21	130.05	129.25	20.0	3.80
8.12.040	43.50	23	142.00	141.20	20.0	4.60
8.12.050	43.50	25	154.20	153.20	20.0	5.40
8.12.060	43.50	27	166.60	165.20	20.0	6.40
8.12.070	43.50	29	179.05	177.25	20.0	7.50
8.12.080	43.50	31	191.25	189.30	20.0	8.70

MACHINED SPROCKETS FOR TAB CHAINS

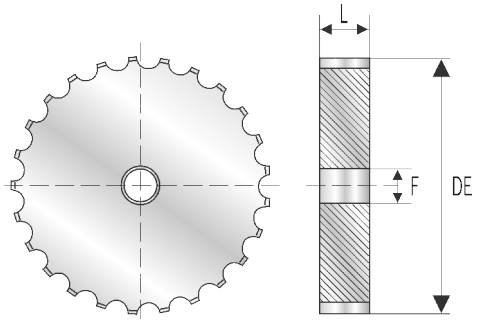

Material: Cast Iron / M.S

Code	Width (mm) (L)	Number of Teeth (z)	DE Outside Diameter (mm)	Pitch Diameter (mm)	F Plain Bore Diameter (mm)	Weight kg/unit
8.12.120	31.0	19	117.10	117.35	20.0	2.20
8.12.130	31.0	21	130.05	129.25	20.0	2.70
8.12.140	31.0	23	142.00	141.20	20.0	3.30
8.12.150	31.0	25	154.20	153.20	20.0	3.90
8.12.160	31.0	27	166.60	165.20	20.0	4.60

CONVEYOR BELTS

Example of a conveyor belt with chain return rollers.
It's important to provide a gap for the catenary sag under the sprockets, in order to avoid excessive tension on the hinges and to make an eventual chain disassembly easies.
The chain return occurs on guides in self-lubricating material (PEUHMW or Nylatron); the chain entry radius should be anyway greater than the backflex radius (Rd).

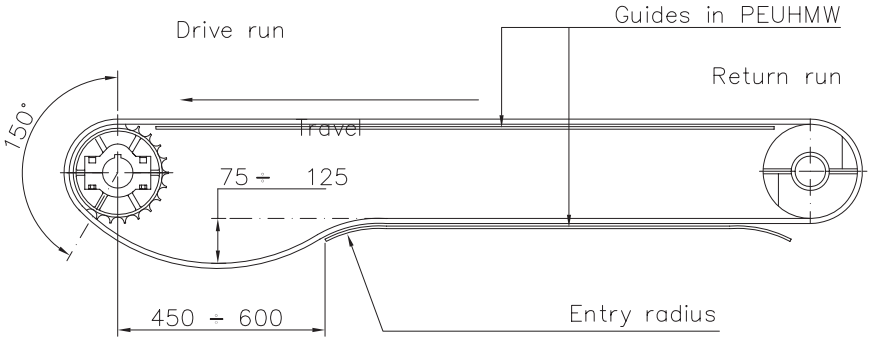

Example of a conveyor belt with chain return rollers.
It's important to provide a gap for the catenary sag under the sprockets, in order to avoid excessive tension on the hinges and to make an eventual chain disassembly easies.
Chain return rollers should have a diameter corresponding at least to twice the dimension of the chain backflex radius (Rd).

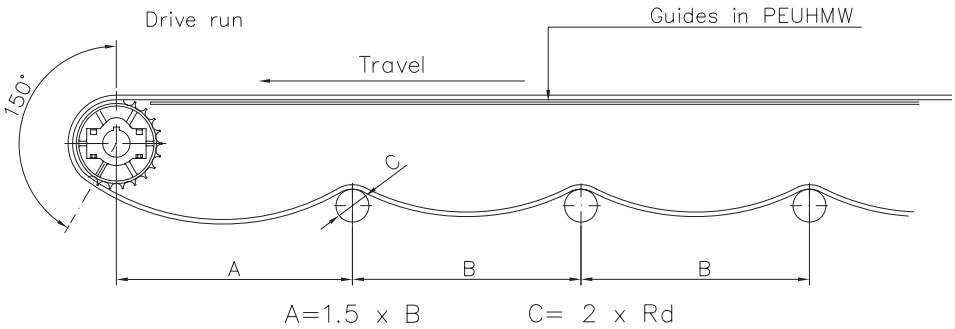

CONVEYOR DESIGN

A few examples of slide guide assembly according to chain type are hereunder represented. It's important to remember that for narrow-base products or products conveyed or more tracks the fundamental value is chain distance(Gap).
The lower this value is, the less unstable the conveyed product becomes.

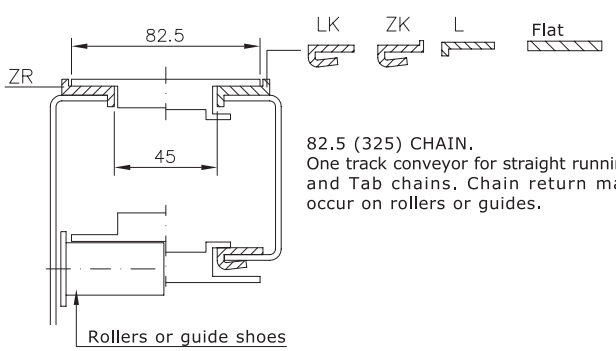

82.5 (325) CHAIN.
One track conveyor for straight running and Tab chains. Chain return may occur on rollers or guides.

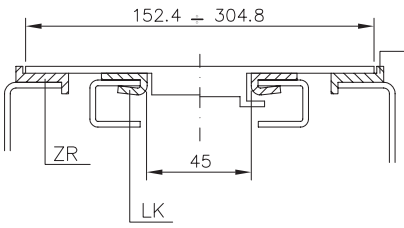

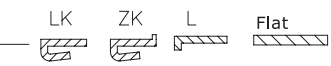

FOR CHAINS:
K600, K750, K1000, K1200.

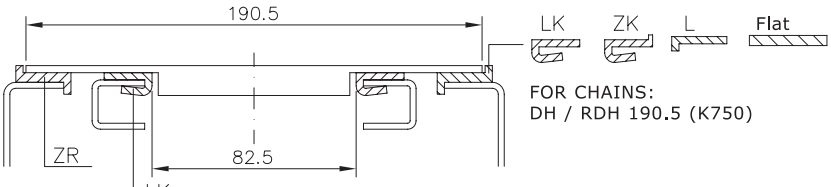

FOR CHAINS:
DH / RDH 190.5 (K750)

1874 CHAINS

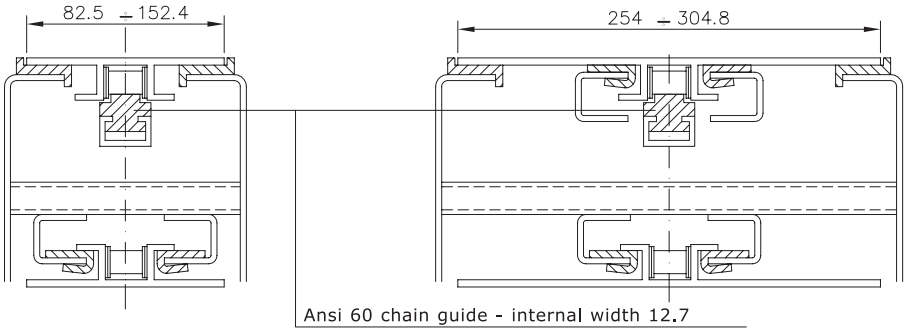

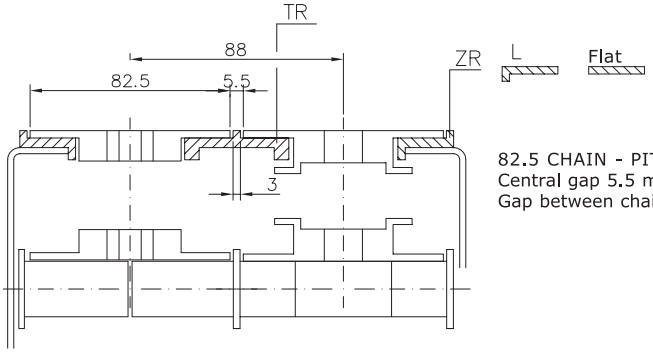

82.5 CHAIN - PITCH 88
Central gap 5.5 mm
Gap between chain internal edges 1.25

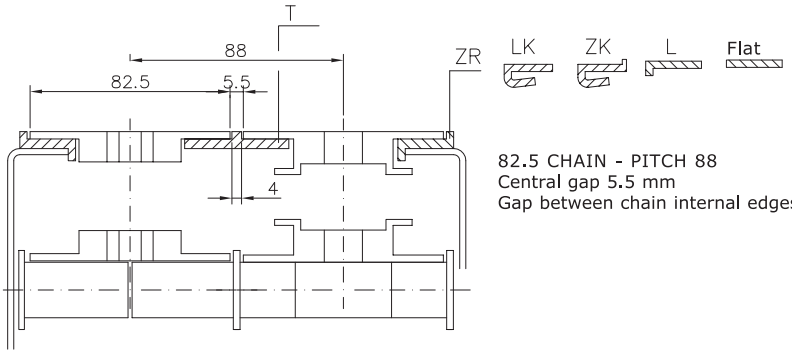

82.5 CHAIN - PITCH 88
Central gap 5.5 mm
Gap between chain internal edges 0.75

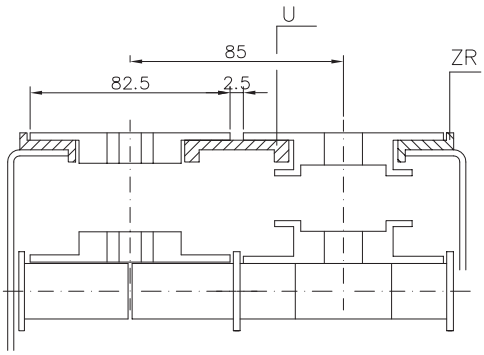

82.5 CHAIN - PITCH 85
Central gap 2.5 mm

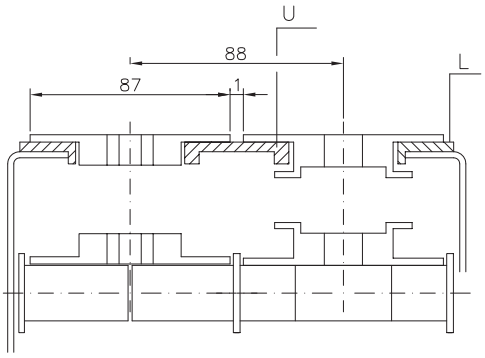

87 CHAIN - PITCH 88
With unstable products or petal bottom bottles it's possible to reduce the gap from 5.5 to 1 mm using 87mm wide chains and replacing lateral guides, thus the conveyor frame remains unchanged.

Tripod

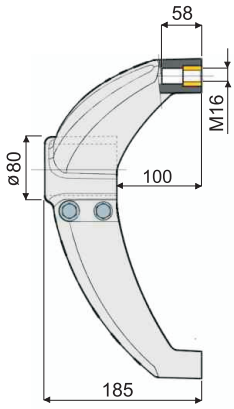

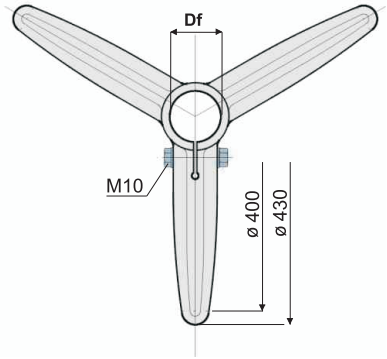

Bd Bore for tubes of (mm)	(Inches)	Zinc plated bolts and nuts Code	Stainless steel bolts and nuts (AISI 304) Code	Tube unthreading load N	Max static load allowed N
48,3	1"1/2	200 / 80590*	200 / 80591	9600	15800

Bipod

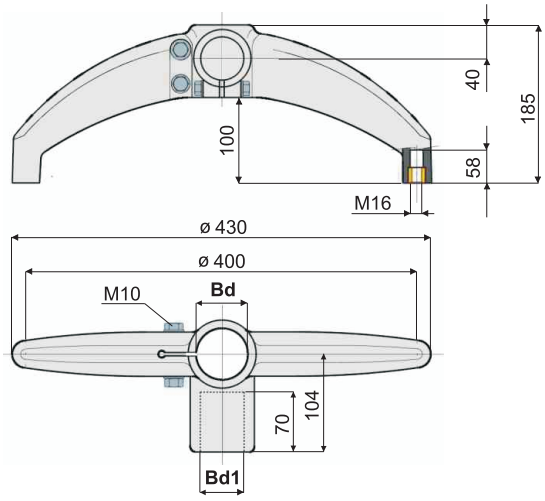

Bd (mm)	(Inches)	Bd1 (mm)	(Inches)	Zinc plated bolts and nuts Code	Stainless steel bolts and nuts (AISI 304) Code	Tube unthreading load N	Max static load allowed N
48,3	1"1/2	42,4	1"1/4	202 / 80628*	202 / 80629	9600	15800

MATERIALS: Base made out of reinforced polyamide, threaded bushing made out of brass, fixing bolts and nuts made out of stainless steel or zinc plated steel.

FEATURES: Max tightening torque 3.6 kgm

PACKAGING: 8 pieces.

Polyamide Bearing

Closed Type*

Open Type*

Conveyor Rollers

Chain Driven Rollers

Plastic Rollers*

** Normally Stocked*

While all reasonable care has been taken in preparing this catalogue, no responsibility is accepted for printing errors.

notes

Sole Distributor :

Meritt

T.R.A.N.S.M.I.S.S.I.O.N.S

157/159, Narayan Dhuru Street,
Behind Nagdevi Street, Mumbai - 400 003, INDIA.
Telephone - 022 - 2344 4956 / 2344 2857 / 2342 8342
Fax - 91-22-2341 4107
E-mail: meritt2@meritt.in • sales@meritt.in
Website: www.meritt.in

MAGRIS ITALY

www.magris.com

In accordance with the quality policy of Meritt Transmissions to constantly improve its products, specifications in this catalogue are subject to change without prior notice.

Sole Distributor :

Meritt

T.R.A.N.S.M.I.S.S.I.O.N.S

157/159, Narayan Dhuru Street,
Behind Nagdevi Street, Mumbai - 400 003. INDIA
Telephone : 2344 4956 / 2344 2857 / 2342 8342
Fax : 91-22-2341 4107
E-mail : sales@meritt.in
meritt2@meritt.in
Web Site: www.meritt.in

MAGRIS ITALY

www.magris.com

In accordance with the quality policy of Meritt Transmissions to constantly improve its products, specifications in this catalogue are subject to change without prior notice.